Level | Pressure | Flow | Temperature | Liquid Analysis | Registration | Systems Components | Services | Solutions

Technical Information

Cerabar M PMC41/45, PMP41/45/46/48

Pressure transmitters
With ceramic and metal sensors
Overload-resistant and function-monitored
With analog, HART or PROFIBUS PA electronics

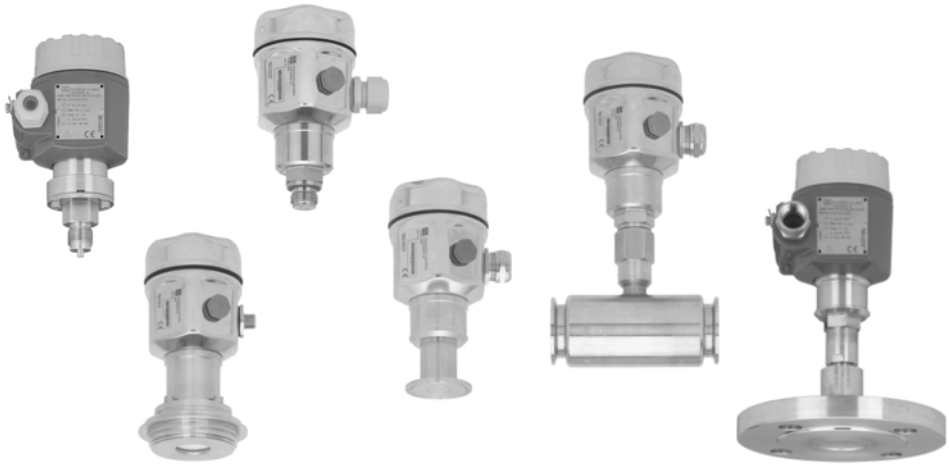

Application
The Cerabar M pressure transmitters measure gauge pressure and absolute pressure in gases, steams, liquids and dusts. Thanks to the modular instrument concept, Cerabar M suits all areas of process engineering.
All process connections are available as hygienic connections, threaded connections, separators and flanges (also as diaphragm seals).

Your benefits

- Accuracy
  - Measured error better than 0.2% of the set measuring range
    (optional: non-linearity better than 0.1%)
  - Configurable measuring range with TD 10:1
  - Long-term stability better than 0.1%/year
- Deployed for pressure monitoring up to SIL 2 as per IEC 61508/IEC 61511-1
- Sensors
  - Dry capacitance ceramic sensor (Ceraphire®) for measuring ranges up to 40 bar - overload-resistant, vacuum-proof, stable against alternating load
  - Piezoresistive sensor with metal diaphragm for measuring ranges up to 400 bar
- Output signals: 4 to 20 mA, 4 to 20 mA with HART, PROFIBUS PA
- Housing
  With its stainless steel housing free of dead space, Cerabar M meets the hygienic requirements of food and pharmaceutical industries.
  The coated aluminum housing has proven its worth in the process industry.
- Device versions in conformity with ASME-BPE

TI399P/00/en

Endress+Hauser
People for Process Automation

Table of contents

Function and system design 4
Device selection 4
Overview of diaphragm seals for PMP46 5
Overview of diaphragm seals for PMP48 6
Measuring principle 7
Communication protocol 8

Human interface 8
Onsite display (optional) 8
Operating elements 9
Onsite operation 10
Handheld terminals – HART 10
FieldCare – HART, PROFIBUS PA 10
Commuwin II – HART, PROFIBUS PA 10

Input 11
Measured variable 11
Measuring range 11
Explanation of terms 13

Output 14
Output signal 14
Signal range 14
Signal on alarm 14
Load – 4 to 20 mA and 4 to 20 mA HART 14
Resolution 14
Reading cycle 14
Cycle time (update time) 15
Response time 15
Damping 15

Power supply 15
Electrical connection 15
Supply voltage 16
Current consumption 16
Cable entry 16
Cable specification 16
Residual ripple 16

Performance characteristics 16
Reference operating conditions 16
Uncertainty of measurement for
small absolute pressure measuring ranges 16
Long-term stability 16
Influence of the installation position 17
Raising and lowering the zero point 17
Maximum measured error 17
Vibrations effects 17
Warm-up period 18
Rise time (T90) 18
Settling time 18
Thermal change of the zero output and the output span 18
Temperature coefficient (TK) for zero output and output span . . . 18

Operating conditions (installation) 19
General installation instructions 19
Measuring arrangement for devices without diaphragm seals –
PMC41, PMC45, PMP41, PMP45 19
Mounting with temperature isolator 19
Wall and pipe-mounting 20
Oxygen applications 21
Ultrapure gas applications 22

Operating conditions (environment) 22
Ambient temperature range 22
Storage temperature range 22
Degree of protection 22
Climate class 22
Electromagnetic compatibility 22

Operating conditions (process) 22
Process temperature limits 22
Temperature operating range, seals 23
Pressure specifications 24

Mechanical construction 25
Dimensions of stainless steel housing 25
Dimensions of aluminum housing 25
Process connections PMC41
(with ceramic measuring diaphragm) 25
Process connections PMC45
(with ceramic measuring diaphragm) 27
Process connections PMP41
(with metallic measuring diaphragm) 35
Process connections PMP45
(with metallic measuring diaphragm) 37
Process connections PMP46
(with metallic measuring diaphragm) 39
Process connections PMP48
(with metallic measuring diaphragm) 45
Weight 51
Material 51

Planning instructions for diaphragm seal systems . . . 52
Applications 52
Planning instructions 52
Diaphragm seal filling oils 53
Influence of the temperature on the zero point 53
Ambient temperature range 58
Installation instructions 58

Certificates and approvals 59
CE mark 59
Ex approvals 59
Pressure Equipment Directive (PED) 59
Functional safety SIL 2/IEC 61508/IEC 61511-1 59
Standards and guidelines 59

Ordering information 60
PMC41 60
PMC45 62
PMP41 65
PMP45 67
PMP46 69
PMP48 71

Documentation 74
Field of Activities 74
Technical Information 74
Operating Instructions 74
Functional Safety Manual (SIL) 74
Safety Instructions 74
Installation/Control Drawings 74

Function and system design

Device selection

Cerabar M – product family	PMC41	PMC45	PMP41	PMP45	PMP46	PMP48
	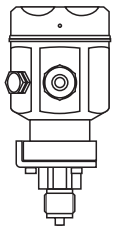 P01-PMC41xxx-16-xx-xx-xx-000	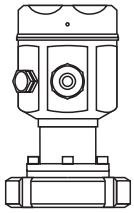 P01-PMC45xxx-16-xx-xx-xx-000	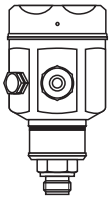 P01-PMP41xxx-16-xx-xx-xx-000	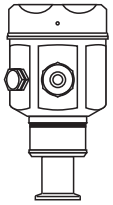 P01-PMP45xxx-16-xx-xx-xx-000	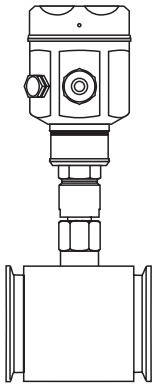 P01-PMP46xxx-16-xx-xx-xx-000	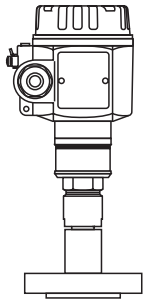 P01-PMP48xxx-16-xx-xx-xx-000
	With capacitive measuring cell and ceramic measuring diaphragm (Ceraphire®)		**With piezoresistive measuring cell and metallic measuring diaphragm**		**With piezoresistive measuring cell and diaphragm seals**	
Field of application	Absolute pressure and gauge pressure					
Process connections	Threaded connections	Flush-mounted hygienic connections	Threaded connections	Flush-mounted hygienic connections	Hygiene diaphragm seal, diaphragm seals in conformity with ASME-BPE → see following section "Overview of PMP46 diaphragm seals"	Flange diaphragm seal, separator with threaded connection → see following section "Overview of PMP48 diaphragm seals"
Measuring ranges	Up to 40 bar		Up to 400 bar			
Over pressure limit (OPL) [1]	Max. 60 bar		Max. 600 bar			
Process temperature range	–40 to +100°C (–40 to +212°F)	–40 to +125°C (–40 to +257°F), +150°C (+302°F) for 1 h	–40 to +100°C (–40 to +212°F)	–40 to +125°C (–40 to +257°F), +150°C (+302°F) for 1 h	up to +350°C (+662°F)	
Ambient temperature range	–40 to +85°C (–40 to +185°F)					
Maximum measured error	– ±0.2% of set span – Optional: non-linearity ±0.1% of set span				±0.2% of set span + influence of diaphragm seal	
Supply voltage	– For non-hazardous areas: 11.5 to 45 V DC – EEx ia: 11.5 to 30 V DC					
Output	4 to 20 mA, 4 to 20 mA with superposed HART protocol, PROFIBUS PA					
Options	– 3.1 Inspection certificate – Materials in conformity with FDA – Mounting bracket	– 3.1 Inspection certificate – Materials in conformity with FDA	– 3.1 Inspection certificate – Materials in conformity with FDA – Mounting bracket	– 3.1 Inspection certificate – Materials in conformity with FDA	– 3.1 Inspection certificate – Materials in conformity with FDA – Temperature isolation – Capillary isolator – Mounting bracket	
Specialties	– Large selection of approvals, including ATEX, FM and CSA – Wide range of cable entries, cable glands and plugs – Choice of robust housing for strict hygienic requirements made of stainless steel (AISI 316L) or coated aluminum housing – Best price/performance ratio – Dry ceramic cell (without fill fluid), resistant to abrasion and corrosion, in conformity with FDA: Ceraphire® – Flexibility thanks to modular design					

1) Dependent on the weakest element, with regard to pressure, of the selected components

Overview of diaphragm seals for PMP46

Design	Diaphragm seal	Connection	Version	Standard	Nominal diameter	Nominal pressure/ Class
Hygienic version	Membrane diaphragm seal (MDM)	Nozzles with coupling nut	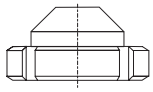 P01-PMP46xxx-03-xx-xx-xx-000	DIN 11851	– DN 32 – DN 40 – DN 50	– PN 40 – PN 40 – PN 25
			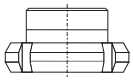 P01-PMP46xxx-03-xx-xx-xx-001	SMS	– 1 1/2" – 2"	PN 25
			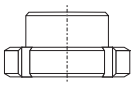 P01-PMP46xxx-03-xx-xx-xx-002	RJT	– 1 1/2" – 2"	PN 40
			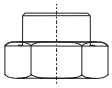 P01-PMP46xxx-03-xx-xx-xx-003	ISS	– 1 1/2" – 2"	PN 40
		Varivent	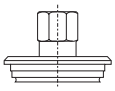 P01-PMP46xxx-03-xx-xx-xx-004		– Type F for pipes DN 25 – DN 32 – Type N for pipes DN 40 – DN 162	PN 40
		Clamp	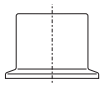 P01-PMP46xxx-03-xx-xx-xx-005	ISO 2852	– DN 25 (1") – DN 38 (1 1/2") – DN 51 (2") – DN 76.1 (3")	Dependent on the clamp used
		DRD	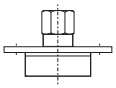 P01-PMP46xxx-03-xx-xx-xx-006		d = 65 mm	PN 25
	Pipe diaphragm seal (RDM)	Threaded adapter	P01-PMP46xxx-03-xx-xx-xx-007	DIN 11851	– DN 25 – DN 40 – DN 50	PN 40
		Clamp	P01-PMP46xxx-03-xx-xx-xx-008	ISO 2852	– DN 10 (3/4") – DN 25 (1") – DN 38 (1 1/2") – DN 51 (2")	Dependent on the clamp used
Versions in conformity with ASME-BPE for use in biotechnical processes; wetted surfaces $R_a \leq 0.4$ µm (15.75 µin; 180 grit), electropolished	Membrane diaphragm seal (MDM)	Clamp	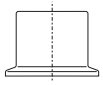 P01-PMP46xxx-03-xx-xx-xx-005	ISO 2852	– DN 25 (1") – DN 51 (2")	Dependent on the clamp used
		Varivent	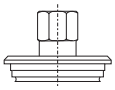 P01-PMP46xxx-03-xx-xx-xx-004		– Type N for pipes DN 40 – DN 162	PN 40

Overview of diaphragm seals for PMP48

Design	Diaphragm seal	Connection	Version	Standard	Nominal diameter	Nominal pressure/ Class
Threaded connection	Membrane diaphragm seal (MDM)	G	P01-PMP48xxx-03-xx-xx-xx-000	DIN ISO 228/1	– G 1 A – G 1 1/2 A – G 2 A	Up to 400 bar
		NPT	P01-PMP48xxx-03-xx-xx-xx-001	ANSI B1.20.1	– 1 NPT – 1 1/2 NPT – 2 NPT	
Threaded connection with separator		G	P01-PMP48xxx-03-xx-xx-xx-002	ISO 228/ EN 837	G 1/2	Up to 160 bar
		NPT	P01-PMP48xxx-03-xx-xx-xx-003	ANSI B1.20.1	1/2 NPT	
Flange		EN/DIN Flange	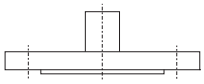 P01-PMP48xxx-03-xx-xx-xx-004	EN 1092-1/ DIN 2527 and DIN 2501-1	– DN 25 – DN 50 – DN 80	– Up to PN 400 – Up to PN 400 – Up to PN 40
		ANSI Flange		ANSI B.16.5	– 1" – 2" – 3" – 4"	– Up to 2500 lbs – Up to 2500 lbs – Up to 300 lbs – Up to 300 lbs
		JIS Flange		B 2220	– 25 A – 50 A – 80 A	Up to 10 K
Flange with extended diaphragm seal		EN/DIN Flange	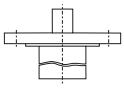 P01-PMP48xxx-03-xx-xx-xx-005	EN 1092-1/ DIN 2527	– DN 50 – DN 80	Up to PN 40
		ANSI Flange		ANSI B.16.5	– 2" – 3" – 4"	Up to 150 lbs

Measuring principle

Ceramic measuring diaphragm used in PMC41 and PMC45 (Ceraphire®)

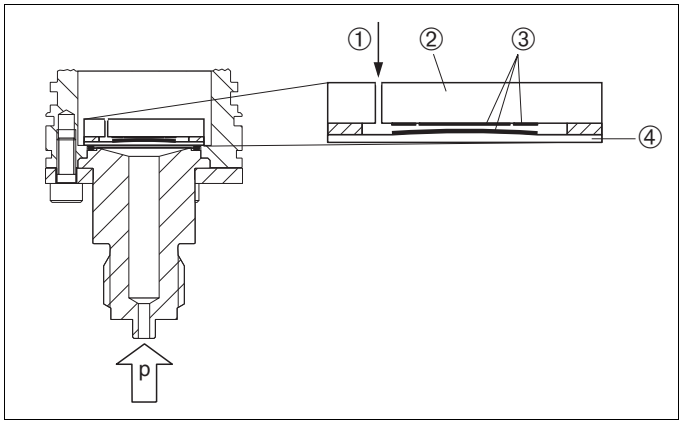

Ceramic sensor

1 *Air pressure (gauge pressure sensors)*
2 *Ceramic carrier*
3 *Electrodes*
4 *Ceramic diaphragm*

Metallic measuring diaphragm used in PMP41, PMP45, PMP46 and PMP48

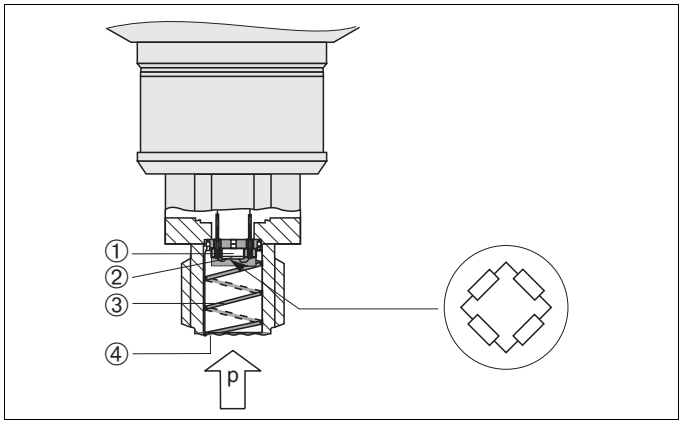

Metal sensor

1 *Silicon measuring element, carrier*
2 *Measuring diaphragm with Wheatston bridge*
3 *Channel with fill fluid*
4 *Flush-mounted metal diaphragm*

Ceramic measuring diaphragm used for PMC41 and PMC45 (Ceraphire®)

The ceramic sensor is a dry sensor, i.e. the process pressure acts directly on the robust ceramic diaphragm and deflects it. A pressure-dependent change in capacitance is measured at the electrodes of the ceramic carrier and the diaphragm. The measuring range is determined by the thickness of the ceramic diaphragm.

Advantages:
- Guaranteed overload resistance up to 40 times the nominal pressure (max. 60 bar)
- Thanks to highly-pure 99.9% ceramic (Ceraphire®, → see also www.endress.com/ceraphire)
  - Extremely high chemical stability
  - Less relaxation
  - High mechanical stability
- Suitable for vacuums
- Very suitable for hygienic processes as the ceramic material Al_2O_3 is safe and not harmful to health (FDA 21CFR186.1256, USP Class VI)

Metallic measuring diaphragm used for PMP41, PMP45, PMP46 and PMP48

PMP41 and PMP45

The operating pressure deflects the separating diaphragm and a fill fluid transfers the pressure to a resistance measuring bridge (semiconductor technology). The pressure-dependent change of the bridge output voltage is measured and processed further.

Advantages:
- Can be used with process pressures up to 400 bar
- High long-term stability
- Guaranteed overload resistance up to 4 times the nominal pressure (max. 600 bar)
- Compact solution also for small hygienic connections

PMP46 and PMP48

The operating pressure acts on the diaphragm of the diaphragm seal and is transferred to the separating diaphragm of the sensor by a diaphragm seal fill fluid. The separating diaphragm is deflected and a fill fluid transfers the pressure to a resistance measuring bridge. The pressure-dependent change of the bridge output voltage is measured and processed further.

Advantages:
- Can be used with process pressures up to 400 bar
- High long-term stability
- Guaranteed overload resistance up to 4 times the nominal pressure (max. 600 bar)

Communication protocol

- 4 to 20 mA without communication protocol
- 4 to 20 mA with HART communication protocol
- PROFIBUS PA
  - The Endress+Hauser Cerabar M devices meet the FISCO model requirements.
  - Due to the low current consumption of 11 mA ±1 mA the following can be operated at one bus segment when installing to FISCO:
    - Up to 9 Cerabar M for EEx ia, CSA IS and FM IS applications
    - Up to 32 Cerabar M for all other applications, e.g. in non-hazardous areas, EEx nA, etc.

  Further information on PROFIBUS PA can be found in Operating Instructions BA034S "PROFIBUS DP/PA: Guidelines for planning and commissioning" and in the PNO guideline.

Human interface

Onsite display (optional)

Analog display for devices with analog electronics

A pluggable liquid crystal display (LCD) with bar graph for current display (30 segments) is used as the display. The display can be rotated in 90° stages.

Functions:
- Bar graph as display of measured value from 0 to 100%. This corresponds to a signal current of 4 to 20 mA.
- The scale flashes to indicate signal undershoot (current < 3.8 mA).
- The bar graph and scale flash to indicate signal overshoot (current > 20.5 mA).

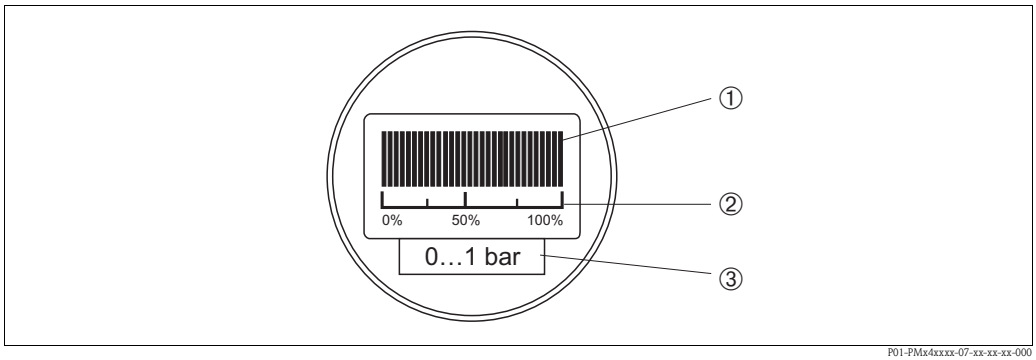

Onsite display for devices with analog electronics

1 Bar graph
2 Scale
3 Cell measuring range

Digital display for devices with 4 to 20 mA HART or PROFIBUS PA electronics

A pluggable digital display with 4-digit pressure display and bar graph (28 segments) is used as the display. The display can be rotated in 90° stages.

Functions:
- 4-digit pressure display
- Bar graph
  - 4 to 20 mA HART: the bar graph displays the current value (4 to 20 mA) belonging to the pressure value.
  - PROFIBUS PA: the bar graph displays the current pressure value in relation to the set measuring range.
- Simplified diagnosis by displaying an error code

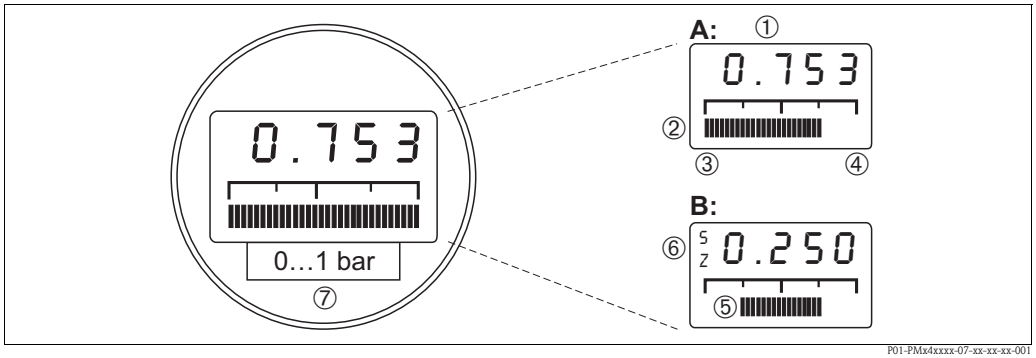

Onsite display for devices with 4 to 20 mA HART or PROFIBUS PA electronics

A Display in measuring mode
B Display in calibration mode

1 4-digit display of measured values and input parameters
2 Bar graph, display of current measured value
3 Lower range value
4 Upper-range scale
5 Set measuring range in measuring limits
6 Display of calibration point (Z (Zero) = lower range value (LRV) or S (Span) = upper range value (URV))
7 Nominal measuring range

Operating elements

The operating elements are located under the optional onsite display on the electronic insert.

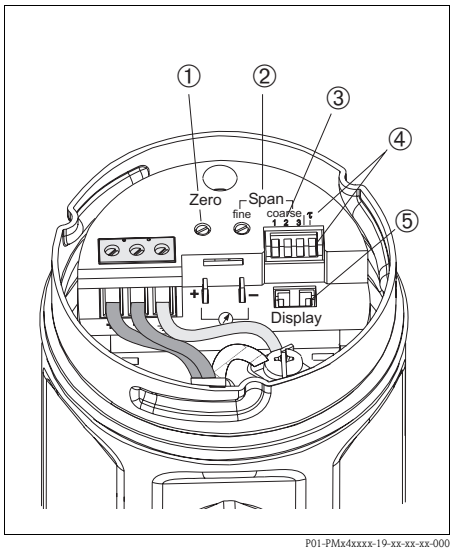

Analog electronic insert

1 Potentiometer for calibrating the lower range value (zero)
2 Potentiometer for fine adjustment of the span
3 DIP switches 1 to 3 for coarse adjustment of the span
4 DIP switches for damping on/off
5 Slot for optional onsite display

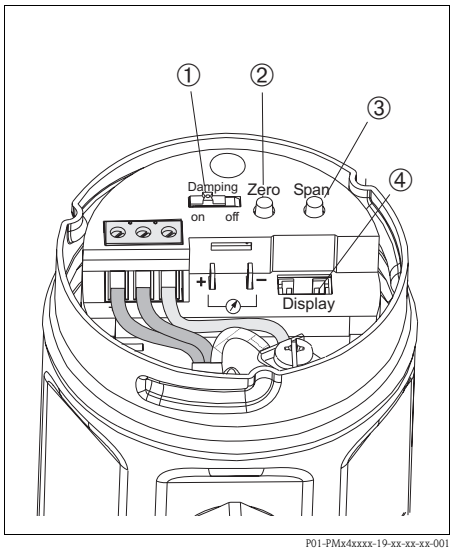

4 to 20 mA HART electronic insert

1 Switch for damping on/off
2 Key for calibrating the lower range value (zero)[1]
3 Key for calibrating the upper range value (span)[2]
4 Slot for optional onsite display

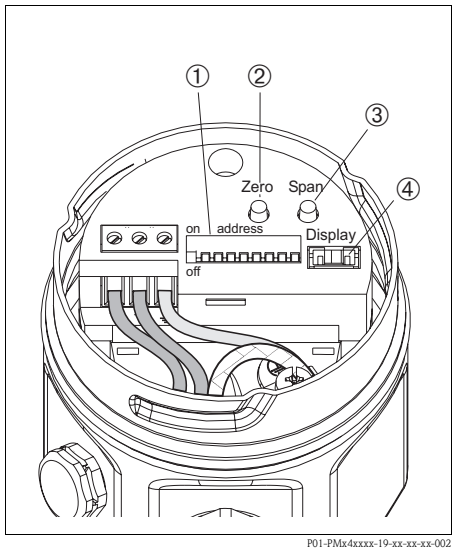

PROFIBUS PA electronic insert

1 DIP switches for bus address
2 Key for calibrating the lower range value (zero)[1]
3 Key for calibrating the upper range value (span)2
4 Slot for optional onsite display

1) Lower range value (LRV) = zero

2) Upper range value (URV) = span

Onsite operation	**Functions 4 to 20 mA** ■ Calibrating the display value e.g. on the onsite display to zero ■ Setting lower range value and upper range value – reference pressure applied at the device ■ Switching damping on and off **Functions 4 to 20 mA HART** ■ Calibrating the display value e.g. on the onsite display to zero ■ Setting lower range value and upper range value – reference pressure applied at the device ■ Switching damping on and off ■ Performing reset **Functions PROFIBUS PA** ■ Calibrating the display value on the onsite display to zero ■ Setting lower range value and upper range value – reference pressure applied at the device ■ Setting the bus address of the device
Handheld terminals – HART	With a handheld terminal, all the parameters can be configured anywhere along the 4 to 20 mA line via menu operation.
FieldCare – HART, PROFIBUS PA	FieldCare is an Endress+Hauser asset management tool based on FDT technology. With FieldCare, you can configure all Endress+Hauser devices as well as devices from other manufacturers that support the FDT standard. The following operating systems are supported: WinNT4.0, Win2000 and Windows XP. FieldCare supports the following functions: ■ Configuration of transmitters in offline and online operation ■ Loading and saving device data (upload/download) ■ Documentation of the measuring point
Commuwin II – HART, PROFIBUS PA	Commuwin II is a graphically supported operating program for intelligent measuring devices with the HART and PROFIBUS PA communication protocols. The following operating systems are supported: Win 3.1/3.11, Win 95, Win 98, WinNT4.0 and Win2000. Commuwin II displays the most important parameters. Commuwin II supports the following functions: ■ Configuration of measuring devices in online operation via matrix operation ■ Loading and saving device data (upload/download) ■ Visualization of measured and limit values ■ Presentation and recording of measured values with a line recorder. Connection option: ■ HART via Commubox FXA 191 and the serial interface RS 232 C of a computer ■ PROFIBUS PA via segment coupler and PROFIBUS interface card

Input

Measured variable Absolute pressure or gauge pressure

Measuring range **PMC41 and PMC45 with ceramic measuring diaphragm (Ceraphire®) for gauge pressure**

Nominal value	Measurement limits		Minimum span	OPL [1]	MWP [2]	Vacuum resistance	Version in the order code [3]
	lower (LRL) [bar]	upper (URL) [bar]	[bar]	[bar]	[bar]	[bar_{abs}]	
100 mbar	0	0.1	0.01	4	2.7	0.7	1C
400 mbar	0	0.4	0.04	8	5.3	0	1F
1 bar	0	1	0.1	10	6.7	0	1H
4 bar	0	4	0.4	25	16.7	0	1M
10 bar	0	10	1	40	26.7	0	1P
40 bar	0	40	4	60	40	0	1S

PMC41 and PMC45 with ceramic measuring diaphragm (Ceraphire®) for negative gauge pressure

Nominal value	Measurement limits		Minimum span	OPL [1]	MWP [2]	Vacuum resistance	Version in the order code[3]
	lower (LRL) [bar]	upper (URL) [bar]	[bar]	[bar]	[bar]	[bar_{abs}]	
100 mbar	–0.1	0.1	0.02	4	2.7	0.7	5C
400 mbar	–0.4	0.4	0.08	8	5.3	0	5F
1 bar	–1	1	0.2	10	6.7	0	5H
4 bar	–4	4	0.5	25	16.7	0	5M
10 bar	–10	10	1.1	40	26.7	0	5P

PMC41 and PMC45 with ceramic measuring diaphragm (Ceraphire®) for absolute pressure

Nominal value	Measurement limits		Minimum span	OPL [1]	MWP [2]	Vacuum resistance	Version in the order code [3]
	lower (LRL) [bar_{abs}]	upper (URL) [bar_{abs}]	[bar]	[barabs]	[barabs]	[bar_{abs}]	
400 mbar	0	0.4	0.04	8	5.3	0	2F
1 bar	0	1	0.1	10	6.7	0	2H
4 bar	0	4	0.4	25	16.7	0	2M
10 bar	0	10	1	40	26.7	0	2P
40 bar	0	40	4	60	40	0	2S

1) OPL: Over pressure limit
2) The MWP (maximum working pressure) for the measuring device depends on the weakest element of the components selected with regard to pressure, i.e. the process connection (→ see Page 25 ff) has to be taken into consideration in addition to the measuring cell (→ see Table above). Also observe pressure-temperature dependency. For the appropriate standards and further information, see Page 24, "Pressure specifications" section.

3) Version in the order code → see also Page 60 ff, feature 30 "Sensor range; MWP, OPL"

PMP41, PMP 45, PMP46 and PMP48 with metallic measuring diaphragm for gauge pressure

Nominal value	Measurement limits		Minimum span	OPL [1]	MWP [2]	Vacuum resistance [3]	Version in the order code [4]
	lower (LRL)	upper (URL)					
	[bar]	[bar]	[bar]	[bar]	[bar]	[bar_{abs}]	
1 bar	0	1	0.1	4	2.7	0.01	3H
4 bar	0	4	0.4	16	10.7	0.01	3M
10 bar	0	10	1	40	26.7	0.01	3P
40 bar	0	40 [5]	4	160	106.7	0.01	3S
100 bar	0	100 [5]	10	400	266.7	0.01	3U [6]
400 bar	0	400 [5]	40	600	400	0.01	3S [6]

PMP41, PMP45, PMP46, PMP48 with metallic measuring diaphragm for negative gauge pressure

Nominal value	Measurement limits		Minimum span	OPL [1]	MWP [2]	Vacuum resistance [3]	Version in the order code [4]
	lower (LRL)	upper (URL)					
	[bar]	[bar]	[bar]	[bar]	[bar]	[bar_{abs}]	
1 bar	–1	1	0.2	4	2.7	0.01	7H
4 bar	–4	4	0.5	16	10.7	0.01	7M
10 bar	–1	10	1.1	40	26.7	0.01	7P

PMP41, PMP45, PMP46, PMP48 with metallic measuring diaphragm for absolute pressure

Nominal value	Measurement limits		Minimum span	OPL [1]	MWP [2]	Vacuum resistance [3]	Version in the order code [4]
	lower (LRL)	upper (URL)					
	[bar_{abs}]	[bar_{abs}]	[bar]	[barabs]	[barabs]	[bar_{abs}]	
1 bar	0	1	0.1	4	2.7	0.01	4H
4 bar	0	4	0.4	16	10.7	0.01	4M
10 bar	0	10	1	40	26.7	0.01	4P
40 bar	0	40	4	160	106.7	0.01	4S
100 bar	0	100	10	400	266.7	0.01	4U [6]
400 bar	0	400	40	600	400	0.01	4Z [6]

1) OPL: Over pressure limit
2) The MWP (maximum working pressure) for the measuring device depends on the weakest element of the components selected with regard to pressure, i.e. the process connection (→ see Page 25 ff) has to be taken into consideration in addition to the measuring cell (→ see Table above). Also observe pressure-temperature dependency. For the appropriate standards and further information, see Page 24, "Pressure specifications" section.

4) Observe the pressure and temperature operating limits of the filling oil selected. → See Page 53, "Diaphragm seal filling oils" section.
3) Version in the order code → see also Page 60 ff, feature 30 "Sensor range; MWP, OPL"
5) Absolute pressure sensors
6) Not for PMP46

Explanation of terms

Explanation of terms: turn down (TD), set span and span based on zero point

Case 1:
- |Lower range value (LRV)| ≤ |Upper range value (URV)|

Example:
- Lower range value (LRV) = 0 bar
- Upper range value (URV) = 0.5 bar
- Nominal value (URL) = 1 bar

Turn down:
- Nominal value/|Upper range value (URV)| = 1 bar/0.5 bar
  TD = 2:1

Set span:
- Upper range value (URV) – Lower range value (LRV) = 0.5 bar – 0 bar
  Set span = 0.5 bar
  This span is based on the zero point.

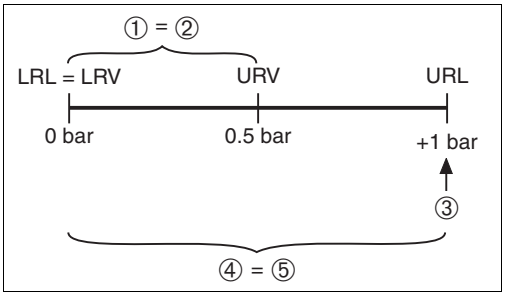

P01-PMx4xxxx-05-xx-xx-xx-001

Example: 1 bar measuring cell

Case 2:
- |Lower range value (LRV)| ≤ |Upper range value (URV)|

Example:
- Lower range value (LRV) = 0 bar
- Upper range value (URV) = 0.5 bar
- Nominal value (URL) = 1 bar

Turn down:
- Nominal value/|Upper range value (URV)| = 1 bar/0.5 bar
  TD = 2:1

Set span:
- Upper range value (URV) – Lower range value (LRV) = 0.5 bar – 0 bar
  Set span = 0.5 bar
  This span is based on the zero point.

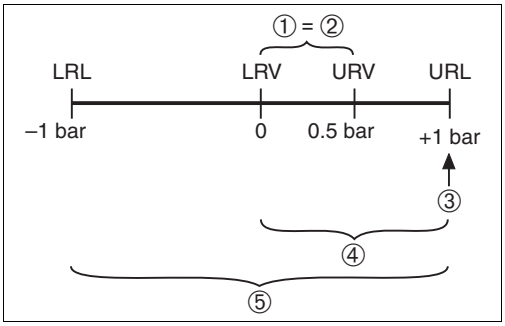

P01-PMx4xxxx-05-xx-xx-xx-002

Example: 1 bar measuring cell

Case 3:
- |Lower range value (LRV)| ≥ |Upper range value (URV)|

Example:
- Lower range value (LRV) = –0.6 bar
- Upper range value (URV) = 0 bar
- Nominal value (URL) = 1 bar

Turn down:
- Nominal value/|Lower range value (LRV)| = 1 bar/0.6 bar
  TD 1.67:1

Set span:
- Upper range value (URV) – Lower range value (LRV) = 0 bar – (–0.6 bar)
  Set span = 0.6 bar
  This span is based on the zero point.

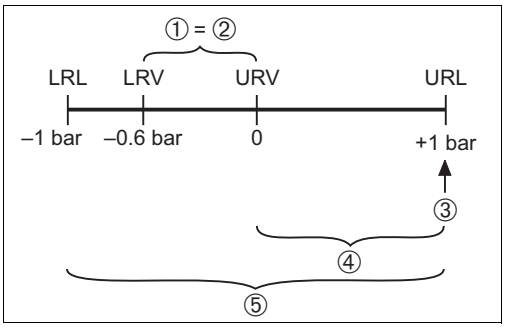

P01-PMx4xxxx-05-xx-xx-xx-003

Example: 1 bar measuring cell

1	*Set span*
2	*Span based on zero point*
3	*Nominal value ≙ upper range limit (URL)*
4	*Nominal measuring range*
5	*Sensor measuring range*
LRL	*Lower range limit*
URL	*Upper range limit*
LRV	*Lower range value*
URV	*Upper range value*

Output

Output signal

- 4 to 20 mA, 2-wire
- 4 to 20 mA with superimposed communication protocol HART, 2-wire
- Digital communication signal PROFIBUS PA (Profile 3.0), 2-wire

Signal range

4 to 20 mA, 4 to 20 mA HART:
- 3.8 to 20.5 mA

Signal on alarm

- 4 to 20 mA:
  – Signal overshoot: > 20.5 mA
  – Signal undershoot: < 3.8 mA
- 4 to 20 mA HART:
  Options:
  – MIN: 3.6 mA
  – MAX: 22 mA (factory setting)
  – Continue: last measured value is kept
- PROFIBUS PA: can be set in the Analog Input block, Options: Last Good Value (factory setting), FSAFE Value, Wrong Value

Load – 4 to 20 mA and 4 to 20 mA HART

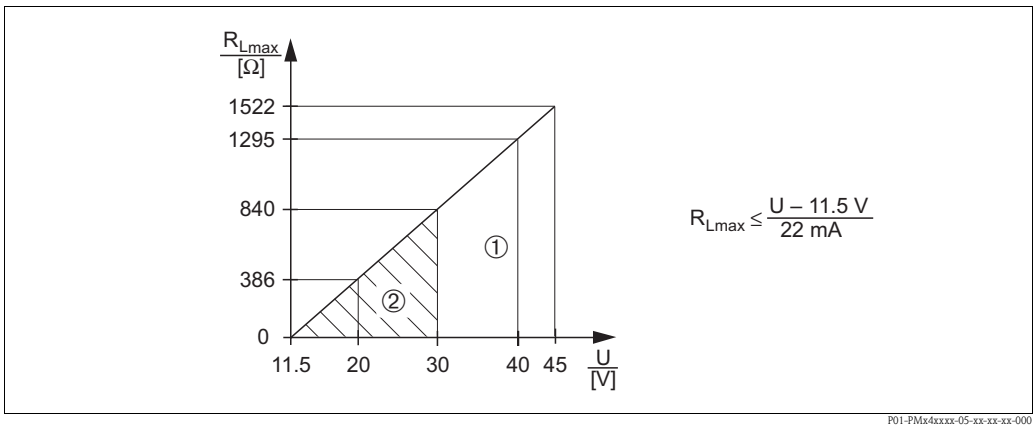

P01-PMx4xxxx-05-xx-xx-xx-000

Load diagram, observe explosion protection.

1 Power supply 11.5 to 45 V DC for devices for non-hazardous areas, 1/3 D, EEx d, EEx nA, FM XP, FM DIP, CSA XP and CSA Dust-Ex
2 Power supply 11.5 to 30 V DC for EEx ia, 1 D, 1/2 D 1/2G, FM IS and CSA IS
R_{Lmax} Maximum load resistance
U Supply voltage

Note!
When operating via a handheld terminal or via PC with an operating program, a minimum communication resistance of 250 Ω must exist within the loop.

Resolution

- 4 to 20 mA:
  – Current output: < 1 µA
  – Onsite display: 30 segments
- 4 to 20 mA HART:
  – Current output:
    – Typical value: 1 µA
    – Max.: 6 µA
  – Onsite display: 28 segments, display value with resolution 1 per thousand
- PROFIBUS PA:
  – Onsite display: 28 segments, display value with resolution 1 per thousand

Reading cycle

- HART commands: on average 3 to 4 per second
- PROFIBUS PA:
  – Cyclic: on average 100/s
  – Acyclic: on average 20/s

Cycle time (update time)

PROFIBUS PA
- The cycle time in a bus segment in cyclic data communication depends on the number of devices, the segment coupler used and the internal PLC cycle time.
- The minimum cycle time is approx. 20 ms per device.

Response time

PROFIBUS PA
- Cyclic: approx. 10 ms per request
- Acyclic: < 50 ms

Damping

4 to 20 mA

- Via DIP switch on the electronic insert, switch position "On" = 2 s, switch position "Off" = 0 s

4 to 20 mA HART

- Via DIP switch on the electronic insert, switch position "On" = set value, switch position "Off" = 0 s
- Via handheld terminal or PC with operating program, continuous 0 to 40 s
- Factory setting: 2 s

PROFIBUS PA

- Via handheld terminal or PC with operating program, continuous 0 to 40 s
- Factory setting: 0.0 s

Power supply

Electrical connection

Note!
- When using the measuring device in hazardous areas, installation must comply with the corresponding national standards and regulations and the Safety instructions (XAs) or Installation or Control drawings (ZDs). → See also Page 74, "Safety Instructions" and "Installation/Control Drawings" sections.
- Protective circuits against reverse polarity, HF influences and overvoltage peaks are installed.
- The shield or grounding (if present) must always be connected to the internal ground terminal in the housing.

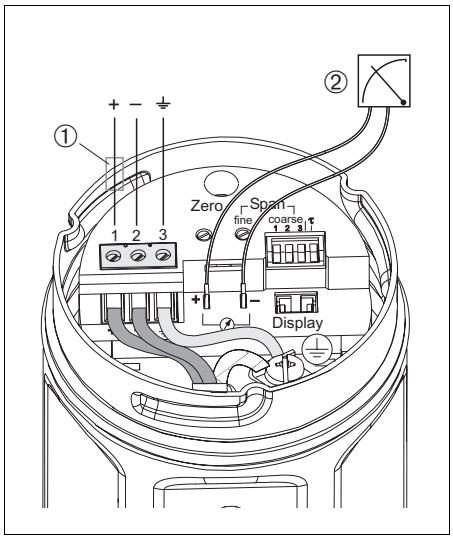

P01-PMx4xxxx-04-xx-xx-xx-000

Analog electronic insert

1 *Devices with ATEX II 1/3 D certificate (non-Ex-powered) must be protected with a 50 mA fuse (slow-blow).*
2 *4 to 20 mA test signal: you can take a 4 to 20 mA test signal via the terminal lugs without interrupting the measurement.*

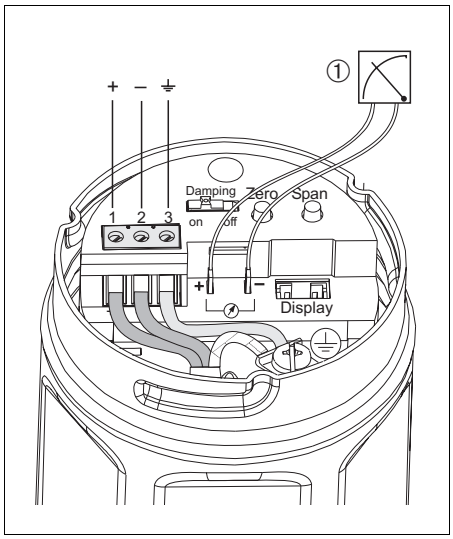

P01-PMx4xxxx-04-xx-xx-xx-001

4 to 20 mA HART electronic insert

1 *4 to 20 mA test signal: you can take a 4 to 20 mA test signal via the terminal lugs without interrupting the measurement.*

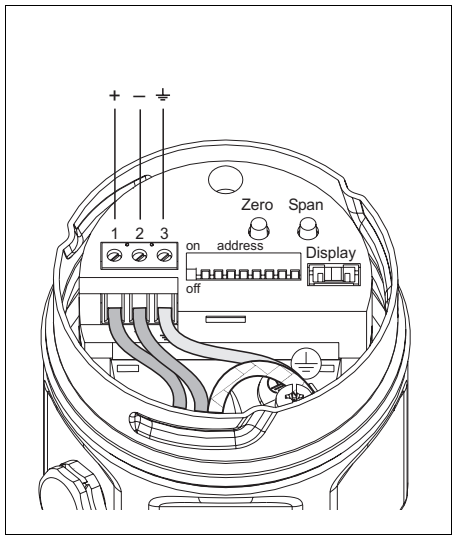

P01-PMx4xxxx-04-xx-xx-xx-002

PROFIBUS PA electronic insert

Supply voltage

Note!
- When using the measuring device in hazardous areas, installation must comply with the corresponding national standards and regulations and the Safety instructions (XAs) or Installation or Control drawings (ZDs).
- All explosion protection data are given in separate documentation which is available upon request. The Ex documentation is supplied as standard with all devices approved for use in explosion hazardous areas. → See also Page 74, "Safety Instructions" and "Installation/Control Drawings" sections.

4 to 20 mA

For non-hazardous areas: 11.5 to 45 V DC

4 to 20 mA HART

For non-hazardous areas: 11.5 to 45 V DC

PROFIBUS PA

For non-hazardous areas: 9 to 32 V DC

Current consumption

PROFIBUS PA: 11 mA ± 1 mA, switch-on current corresponds to IEC 61158-2, Clause 21

Cable entry

→ See also Page 60 ff, feature 20 "Housing; Electrical connection".

Cable specification

- Endress+Hauser recommends using shielded, twisted pair two-wire cables.
- Terminals for wire cross-sections 0.14 to 2.5 mm^2
- Cable outer diameter: 5 to 9 mm

Residual ripple

4 to 20 mA and 4 to 20 mA HART

- Without influence on 4 to 20 mA signal up to ±5% residual ripple within the permitted voltage range (according to HART hardware specification HCF_SPEC-54 (DIN IEC 60381-1))
- With HART Communicator or Commubox:
  Max. ripple (measured at 500 Ω) 47 to 125 Hz: U_{ss} = 200 mV
  Max. noise (measured at 500 Ω) 500 Hz to 10 kHz: U_{eff} = 2.2 mV

Performance characteristics

Reference operating conditions

- As per IEC 60770
- Ambient temperature range T_A = constant, in range: +21 to +33°C (+69.8 to +91.4°F)
- Humidity φ = constant, in range: 20 to 80% RH
- Ambient pressure p_A = constant, in range: 860 to 1060 mbar
- Position of measuring cell = constant, in range: horizontal ±1°
- Input of LOW SENSOR CALIBRATION and HIGH SENSOR CALIBRATION for lower range value and upper range value
- Span based on zero point
- Membrane material PMC41 and PMC45: Al_2O_3 (aluminum oxide ceramic)
- Membrane material PMP41, PMP45, PMP46 and PMP48: AISI 316L/1.4435
- Filling oil: mineral oil
- Supply voltage: 24 V DC ± 3 V DC
- Load for HART: 250 Ω
- Turn down: 1:1 to 10:1

Uncertainty of measurement for small absolute pressure measuring ranges

The smallest expanded uncertainty of measurement that can be returned by our calibration standards is 0.4% of the set span in the range 1 to 30 mbar.

Long-term stability

- ±0.1% of URL/year
- ±0.25% of URL/3 years

Influence of the installation position

A position-dependent zero point shift can be corrected within the (extended) measuring range. → See also the following section "Raising and lowering the zero point", Page 19, "General installation instructions" section and Page 58 ff, "Installation instructions, diaphragm seal systems" section.

Raising and lowering the zero point

- 4 to 20 mA: ±10% within the extended measuring range
- 4 to 20 mA HART: as required within the extended measuring range
- PROFIBUS PA: as required within the extended measuring range

Examples for extended measuring limits and raising and lowering the zero point

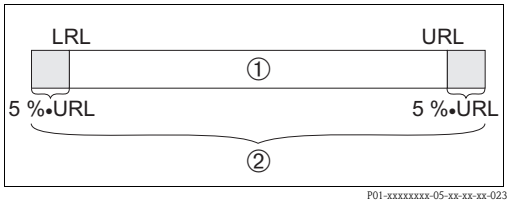

Case 1

Case 1:
- 4 to 20 mA HART or PROFIBUS PA
- And gauge pressure sensors with a lower range limit (LRL) > –1 bar

Example 1:
- Sensor measuring range: 0 to 10 bar
- Extended measuring range: –0.5 to 10.5 bar (the zero point can be adjusted in this range)

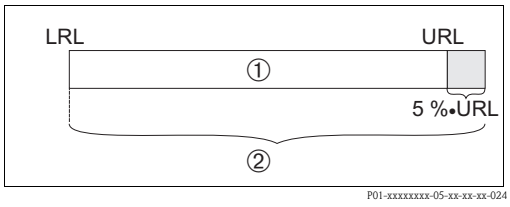

Case 2

Case 2:
- 4 to 20 mA HART or PROFIBUS PA
- Absolute pressure sensors and gauge pressure sensors with a lower range limit (LRL) = –1 bar

Example 2:
- Sensor measuring range: –1 to 10 bar
- Extended measuring range: –1 to 10.5 bar (the zero point can be adjusted in this range)

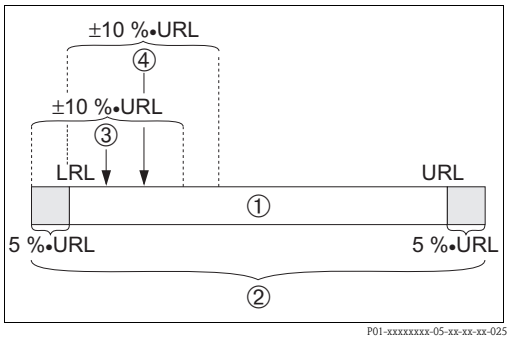

Case 3, example 3 and 4

Case 3:
- 4 to 20 mA

Example 3:
- Sensor measuring range: 0 to 10 bar
- Extended measuring range: –0.5 to 10.5 bar
- A pressure of 0.5 bar is applied at the device. The zero point can be adjusted in the range –0.5 to 1.5 bar.

Example 4:
- Sensor measuring range: 0 to 10 bar
- Extended measuring range: –0.5 to 10.5 bar
- A pressure of 1 bar is applied at the device. The zero point can be adjusted in the range 0 to 2 bar.

1 Sensor measuring range
2 Extended measuring range
3 Pressure applied at the device, see Case 3, Example 3
4 Pressure applied at the device, see Case 3, Example 4
LRL Lower range limit
URL Upper range limit

Maximum measured error

The measured error comprises the non-linearity including hysteresis and non-reproducibility in accordance with the limit point method as per IEC 60770.

PMC41, PMC45, PMP41, PMP45:
- ±0.2% of set span
- Optional: ±0.1% non-linearity of set span,
  (→ See also Page 60 ff, "Ordering information" section, feature 40 "Calibration; Unit", version "C")

PMP46, PMP48:
- ±0.2% of set span + influence of diaphragm seal

Note!
In the case of gauge pressure measurement using absolute pressure sensors with measuring ranges ≤ 10 bar, the accuracy can be affected by fluctuating ambient air pressure.

Vibrations effects

Without any effects up to 5 to 15 Hz: ±4 mm
15 to 150 Hz: 2 g

	150 to 2000 Hz: 1 g
Warm-up period	■ 4 to 20 mA: 200 ms ■ 4 to 20 mA HART: 1 s ■ PROFIBUS PA: 1 s
Rise time (T90)	■ 4...20 mA: 60 ms ■ 4...20 mA HART: 220 ms ■ PROFIBUS PA: 220 ms
Settling time	■ 4...20 mA: 180 ms ■ 4...20 mA HART: 600 ms ■ PROFIBUS PA: 600 ms
Thermal change of the zero output and the output span	**4 to 20 mA** –10 to +60°C (+14 to +140°F): ■ ±(0.3 x TD + 0.3)% of set span –40 to –10°C, +60 to +85°C (–40 to +14°F, +140 to +185°F): ■ ±(0.5 x TD + 0.5)% of set span +85 to +125°C (+185 to +257°F) (only PMC45/PMP45): ■ ±(0.8 x TD + 0.8)% of set span **4 to 20 mA HART, PROFIBUS PA** –10 to +60°C (+14 to +140°F): ■ ±(0.2 x TD + 0.2)% of set span –40 to –10°C, +60 to +85°C (–40 to +14°F, +140 to +185°F): ■ ±(0.4 x TD + 0.4)% of set span +85 to +125°C (+185 to +257°F) (only PMC45/PMP45): ■ ±(0.6 x TD + 0.6)% of set span PMP46, PMP48: the data apply to the transmitter without diaphragm seals and capillary line.
Temperature coefficient (T_K) for zero output and output span	If the value for the temperature coefficient exceeds the value for the thermal change, the thermal change automatically applies. **4 to 20 mA** –10 to +60°C (+14 to +140°F): ■ ±0.15% of URL/10 K –40 to –10°C, +60 to +85°C (–40 to +14°F, +140 to +185°F): ■ ±0.2% of URL/10 K +85 to +125°C (+185 to +257°F) (only PMC45/PMP45): ■ ±0.25% of URL/10 K **4 to 20 mA HART, PROFIBUS PA** –10 to +60°C (+14 to +140°F): ■ ±0.08% of URL/10 K –40 to –10°C, +60 to +85°C (–40 to +14°F, +140 to +185°F): ■ ±0.1% of URL/10 K +85 to +125°C (+185 to +257°F) (only PMC45/PMP45): ■ ±0.12% of URL/10 K PMP46, PMP48: the data apply to the transmitter without diaphragm seals and capillary line.

Operating conditions (installation)

General installation instructions

- The position-dependent zero shift can be corrected directly at the device by means of a key or a potentiometer. Diaphragm seals also shift the zero point, depending on the installation position (→ see also Page 58, "Installation instructions, diaphragm seal systems" section).
- Endress+Hauser offers a mounting bracket for installing on pipes. → See also Page 20, "Wall and pipe-mounting" section.
- The onsite display can be rotated in 90° stages.
- Devices with EHEDG approval: these devices must be installed in accordance with the Hygienic Equipment Design Criteria to meet the requirements of EHEDG.
- For PMP46, PMP48: see Page 58, "Installation instructions, diaphragm seal system" section.

Measuring arrangement for devices without diaphragm seals – PMC41, PMC45, PMP41, PMP45

Cerabar M devices without diaphragm seals are mounted as per the norms for a manometer (DIN EN 839-2). We recommend the use of shutoff devices and siphons. The orientation depends on the measuring application.

Pressure measurement in gases

- Mount Cerabar M with shutoff device above the tapping point so that the condensate can flow into the process.

Pressure measurement in steams

- Mount Cerabar M with siphon below the tapping point.
  The siphon reduces the temperature to almost ambient temperature.
- Fill the siphon with fill fluid before commissioning.

Pressure measurement in liquids

- Mount Cerabar M with shutoff device below or at the same level as the tapping point.

Mounting with temperature isolator

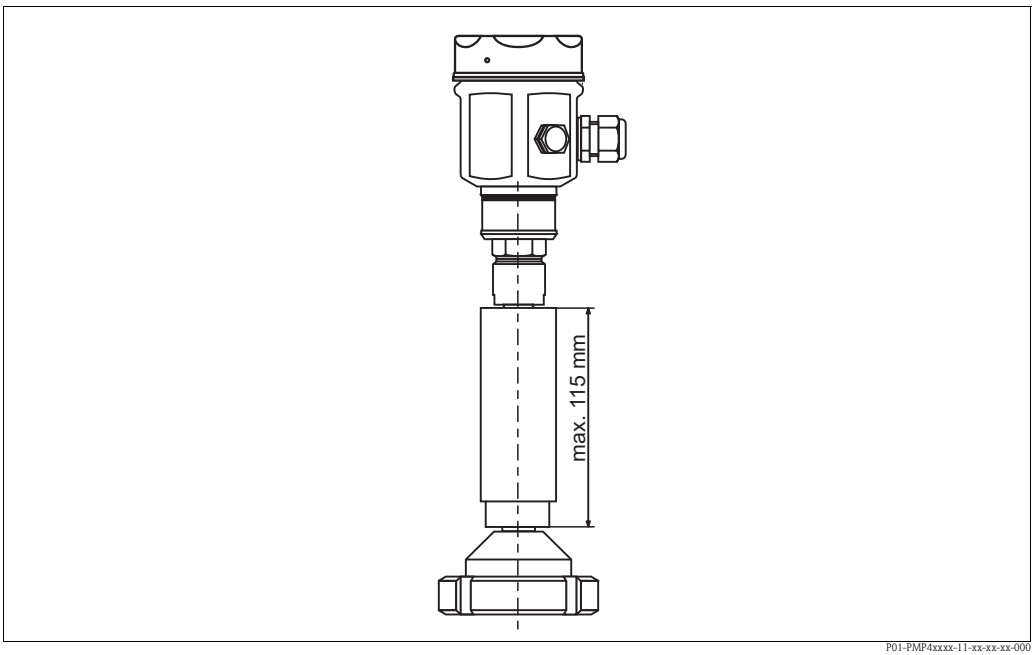

P01-PMP4xxxx-11-xx-xx-xx-000

Endress+Hauser recommends the use of temperature isolators in the event of constant extreme fluid temperatures which lead to the maximum permissible electronics temperature of +85°C (+185°F) being exceeded.
The additional installation height also brings about a zero point shift of max. 21 mbar due to the hydrostatic column in the temperature isolator. The position-dependent zero shift can be corrected.

Wall and pipe-mounting

Endress+Hauser offers a mounting bracket for installing on pipes or walls for PMC41, PMP41, PMP46 and PMP48. You can order the mounting bracket either via the order code (→ see Page 61 ff, feature 60, "Additional option") or separately as an accessory.

PMC41
- Order number: 919806-0000
- Material: AISI 304 (1.4301)

PMP41, PMP46 and PMP48
- Order number: 52001402
- Material: AISI 304 (1.4301)

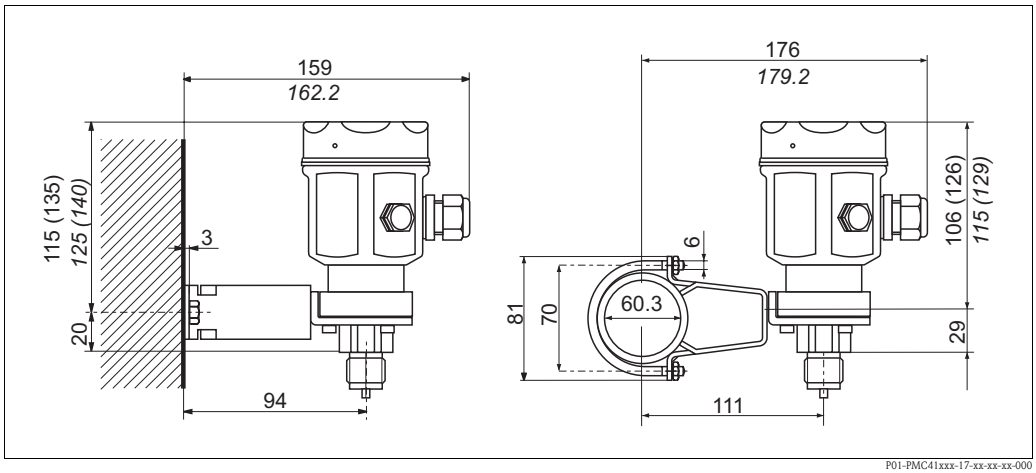

Wall and pipe-mounting PMC41

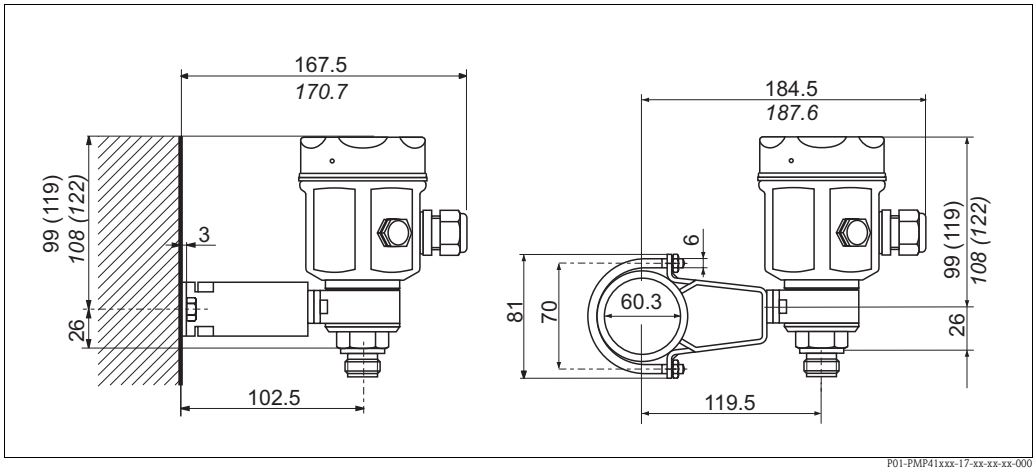

Wall and pipe-mounting PMP41

The dimensions in brackets apply to housings with a high cover (for optional display). Dimensions written in italics apply to devices with an aluminum housing.

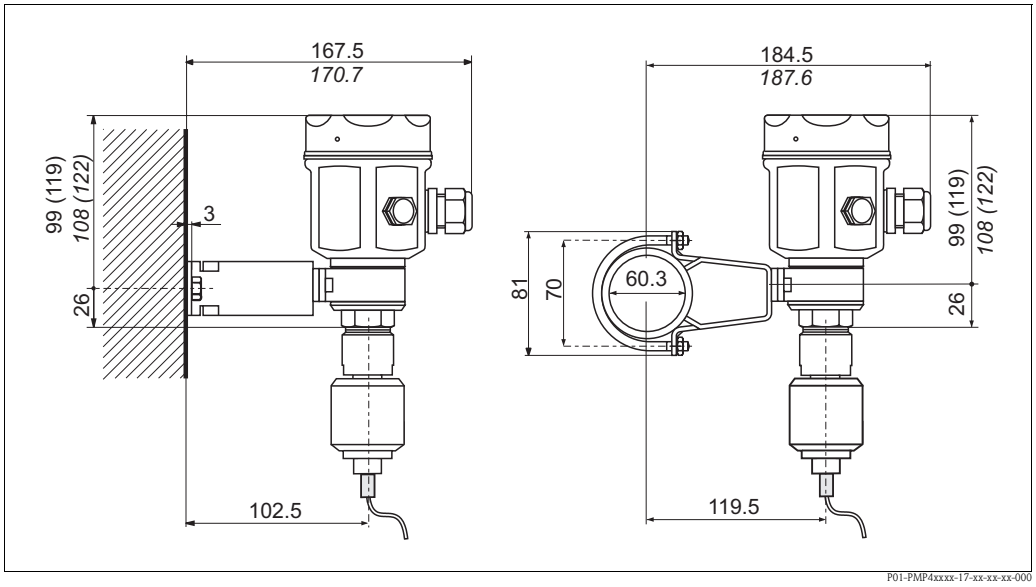

Wall and pipe mounting PMP46/PMP48

The dimensions in brackets apply to housings with a high cover (for optional display). Dimensions written in italics apply to devices with an aluminum housing.

Oxygen applications

Oxygen and other gases can react explosively to oils, grease and plastics, such that, among other things, the following precautions must be taken:
- All components of the system, such as measuring devices, must be cleaned in accordance with the BAM (DIN 19247) requirements.
- Depending on the materials used, a certain maximum temperature and a maximum pressure must not be exceeded in oxygen applications. The maximum temperature T_{max} for oxygen applications is 60°C (+140°F).

The devices suitable for gaseous oxygen applications are listed in the following table, indicated by p_{max}.

Order code for devices cleaned for oxygen applications	**p_{max} for oxygen applications**	**Restrictive component**
PMC41 – * ** ** * * * ** 6, for devices with sensors, nominal value < 10 bar	Over pressure limit (OPL) of sensor[1]	Sensor
PMC41 – * ** ** * * * ** 6, for devices with sensors, nominal value ≥10 bar	30 bar	FKM Viton V70G3 seal
PMP41 – * ** ** * * * ** C, for devices with sensors, nominal value < 40 bar	Over pressure limit (OPL) of sensor[1]	Sensor
PMP41 – * ** ** * * * ** C, for devices with sensors, nominal value ≥ 40 bar	160 bar	Halocarbon 6.3 fill fluid
PMP46 – * ** ** * * * ** N	Depends on the weakest link in terms of pressure of the selected components: over pressure limit (OPL) of sensor[1] or process connection (1.5 x PN)	Sensor or process connection
PMP48 – * ** ** * * * ** N *	Depends on the weakest link in terms of pressure of the selected components: over pressure limit (OPL) of sensor [1], process connection (1.5 x PN) or Halocarbon 6.3 fill fluid (160 bar)	Sensor, process connection, Halocarbon 6.3 fill fluid

1) → See Page 60 ff "Ordering information", feature 30 "Sensor range; MWP; OPL".

Ultrapure gas applications

Endress+Hauser also offers degreased devices for special applications, such as ultrapure gas.
No special restrictions regarding the process conditions apply to these devices.

→ See also Page 61, PMC41: feature 80 "Sensor seal".
→ See also Page 66, PMP41: feature 80 "Seal; Fill fluid".

Operating conditions (environment)

Ambient temperature range

- –40 to +85°C (–40 to +185°F)
- Onsite display 4 to 20 mA: –30 to +80°C (–22 to +176°F)
- Onsite display 4 to 20 mA HART, PROFIBUS PA: –25 to +70°C (–13 to +158°F)
  Lower temperatures minimize the display speed.

For devices for use in hazardous areas, see Safety Instructions (XAs), Installation or Control Drawing (ZDs). (→ See also Page 74, "Safety Instructions" and "Installation/Control Drawing" sections)

Storage temperature range

- –40 to +100°C (–40 to +212°F)
- Onsite display: –40 to +80°C (–40 to +176°F)

Degree of protection

→ See Page 60 ff, feature 20 "Housing; Electrical connection".

Climate class

Class 4K4H (air temperature: –20 to 55°C (–4 to 131°F), relative humidity: 4 to 100%)
fulfilled as per DIN EN 60721-3-4 (condensation possible)

Electromagnetic compatibility

- Interference emission as per EN 61326 electrical device B, Interference immunity as per EN 61326 appendix A (industrial use) and NAMUR EMC recommendation (NE 21).
- Maximum deviation: < 0.5% of span
- Maximum deviation for 100 mbar sensors: < 1.25% of span
- All measurements were performed with a turn down (TD) = 1:1.

Operating conditions (process)

Process temperature limits

Note!
- For oxygen applications, see Page 21, "Oxygen applications" section.
- PMC41 and PMC45: extreme jumps in temperature can result in temporary measuring errors. Temperature compensation takes effect after several minutes. Internal temperature compensation is faster the smaller the temperature jump and the longer the time interval.

PMC41 (with ceramic measuring diaphragm)

- –40 to +100°C (–40 to +212°F)
- Observe temperature operating range of the seal. → See also the following section "Temperature operating range, seals".

PMC45 (with ceramic measuring diaphragm)

- –40 to +125°C (–40 to +257°F) (+150°C (+302°F) for max. 1 hour)
- Observe temperature operating range of the seal. → See also the following section "Temperature operating range, seals".

PMP41 (with metallic measuring diaphragm)

- –40 to +100°C (–40 to +212°F)
- Observe temperature operating range of the seal. → See also the following section "Temperature operating range, seals".

PMP45 (with metallic measuring diaphragm)

- –40 to +125°C (–40 to +257°F) (+150°C (+302°F) for max. 1 hour)

PMP46 and PMP48 (with metallic measuring diaphragm)

- Depends on diaphragm seal and filling oil up to 350°C (662°F)
  Observe the temperature application limits of the diaphragm seal oil. → See also Page 53, "Diaphragm seal filling oils" section.

Temperature operating range, seals

PMC41 (with ceramic measuring diaphragm)

Version for feature 80 in the order code	Seal	Temperature operating range
1	FKM Viton	–20 to +100°C (+4 to +212°F)
2	NBR	–20 to +80°C (+4 to +176°F)
4	EPDM	–20 to +100°C (+4 to +212°F)
C	Chemraz, Compound 505	–10 to +100°C (+14 to 212°F)
7	Kalrez, Compound 4079	+5 to +100°C (+41 to +212°F)
A	FKM Viton, oil + grease free	–10 to +100°C (+14 to +212°F)
6	FKM Viton, cleaned for oxygen service	–10 to +60°C (+14 to 140°F)
9	Silicone to be ordered as special version	–40 to +100°C (–40 to +212°F)

PMC45 (with ceramic measuring diaphragm)

Version for feature 80 in the order code	Seal	Temperature operating range
1	FKM Viton	–20 to +125°C (–4 to +257°F)
2 [1]	HNBR (FDA 21CFR177.2600); 3A Class II; KTW; AFNOR; BAM; USP Class VI	–20 to +80°C (–4 to +176°F)
2	HNBR, Compound IGWBR 13-70	–20 to +80°C (–4 to +176°F)
4 [1]	EPDM (FDA 21CFR177.2600); 3A Class I; USP Class VI	–20 to +125°C (–4 to +257°F)
4	EPDM	–20 to +125°C (–4 to +257°F)
C	Chemraz, Compound 505	–10 to +125°C (+14 to +257°F)
7	Kalrez, Compound 4079	+5 to +125°C (+41 to 257°F)
A	FKM Viton, oil + grease free	–10 to +125°C (+14 to 257°F)
9	Silicone to be ordered as special version	–40 to +125°C (–40 to 257°F)

1) These seals are used for devices with 3A-approved process connections. → See also Page 63 "Ordering information", feature 70 "Process connections".

PMP41 (with metallic measuring diaphragm)

Version in the order code	Seal	Temperature operating range
1	FKM Viton	–20 to +100°C (–4 to +212°F)
4	FKM Viton, oil + grease free	–20 to +100°C (–4 to +212°F)
H	FKM Viton	–20 to +100°C (–4 to +212°F)
P	PTFE + Alloy C	–40 to +100°C (–40 to +212°F)
F	NBR	–20 to +80°C (–4 to +176°F)

Pressure specifications

- The MWP (maximum working pressure) of the device is specified on the nameplate. It depends on the lowest-rated element, with regard to pressure, of the selected components. See the following sections:
  – → Page 60 ff, "Ordering information" section, feature 30 "Sensor range; MWP; OPL"
  – → Page 25 ff, "Mechanical construction" section.
  The MWP information on the nameplate refers to a reference temperature of 20°C (68°F), or to 100 °F for ANSI flanges. Observe the pressure-temperature dependencies.
- The pressure values permitted at higher temperatures can be found in the following standards:
  – EN 1092-1: 2001 Tab. 18 [1]
  – ASME B 16.5a – 1998 Tab. 2-2.2 F316
  – ASME B 16.5a – 1998 Tab. 2.3.8 N10276
  – JIS B 2220.
- The test pressure corresponds to the over pressure limit (OPL) of the device = MWP x 1.5.
- The Pressure Equipment Directive (EC Directive 97/23/EC) uses the abbreviation "PS". The abbreviation "PS" corresponds to the MWP (maximum working pressure) of the measuring device.
- In the case of sensor range and process connection combinations where the OPL of the process connection is smaller than the nominal value of the sensor, the device is set at the factory, at the very maximum, to the OPL value of the process connection. If you want to use the entire sensor range, select a process connection with a higher OPL value (1.5 x PN; PN = MWP).
- In oxygen applications, the values for "p_{max} and T_{max} for oxygen applications" as per Page 21, "Oxygen applications" may not be exceeded.

1) With regard to its stability-temperature property, the material 1.4435 is identical to 1.4404 which is grouped under 13E0 in EN 1092-1 Tab. 18. The chemical composition of the two materials can be identical.

Mechanical construction

Dimensions of stainless steel housing

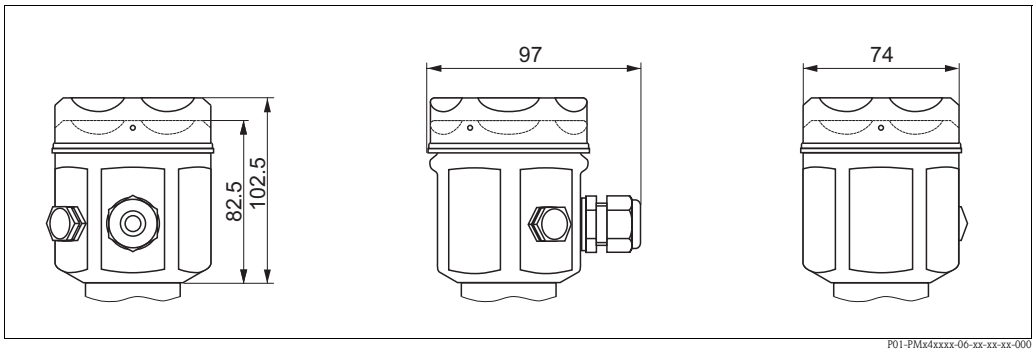

Dimensions of aluminum housing

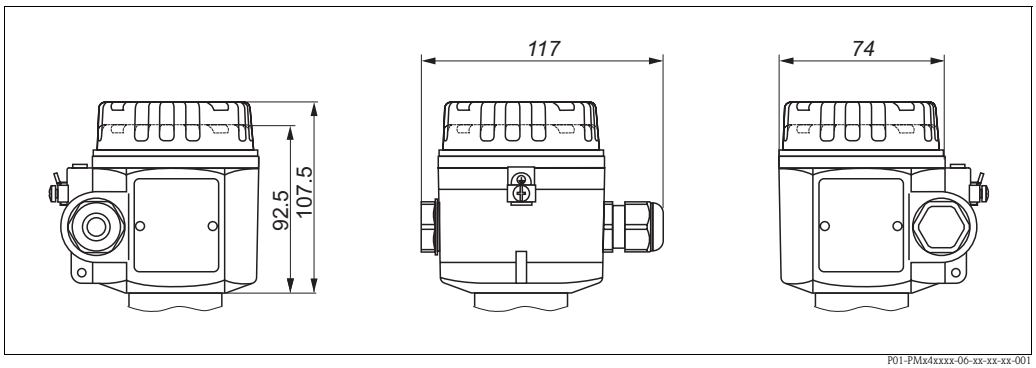

Process connections PMC41 (with ceramic measuring diaphragm)

Note!
- The installation heights in brackets apply to housings with a high cover (for optional display). Installation heights written in italics apply to devices with an aluminum housing.

Thread, inner diaphragm

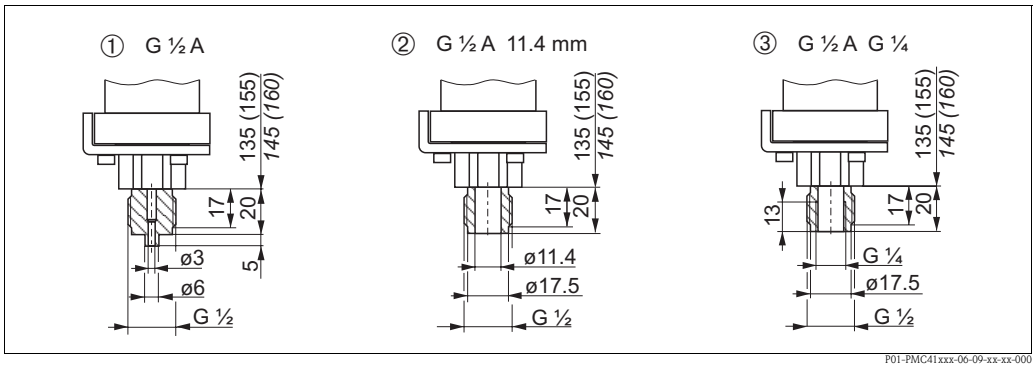

Process connections PMC41, thread ISO 228

1 Thread ISO 228 G 1/2 A, version 1M: AISI 316L/1.4435, version 2M: Alloy C
2 Thread ISO 228 G 1/2 A bore 11.4 mm, version 1R: AISI 316L/1.4435
3 Thread ISO 228 G 1/2 A G 1/4 (female), version 1P: AISI 316L/1.4435

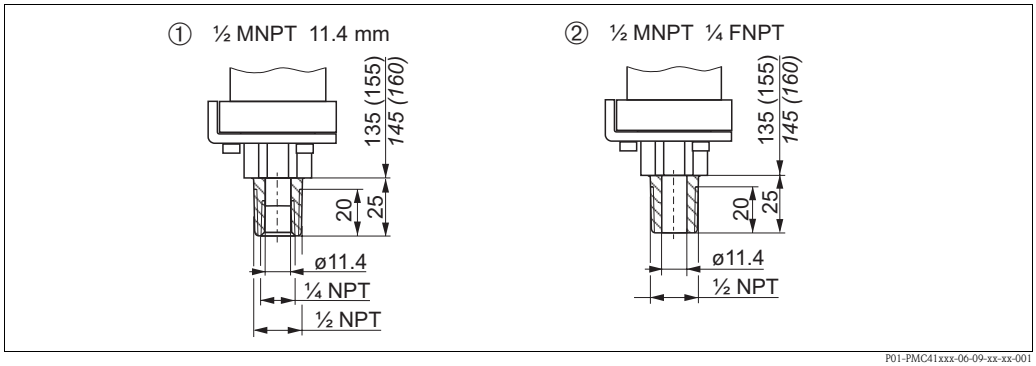

Process connections PMC41, thread ANSI

1 Thread ANSI 1/2 MNPT bore 11.4 mm, version 1A: AISI 316L/1.4435
2 Thread ANSI 1/2 MNPT 1/4 FNPT, version 1N: AISI 316L/1.4435, version 2N: Alloy C

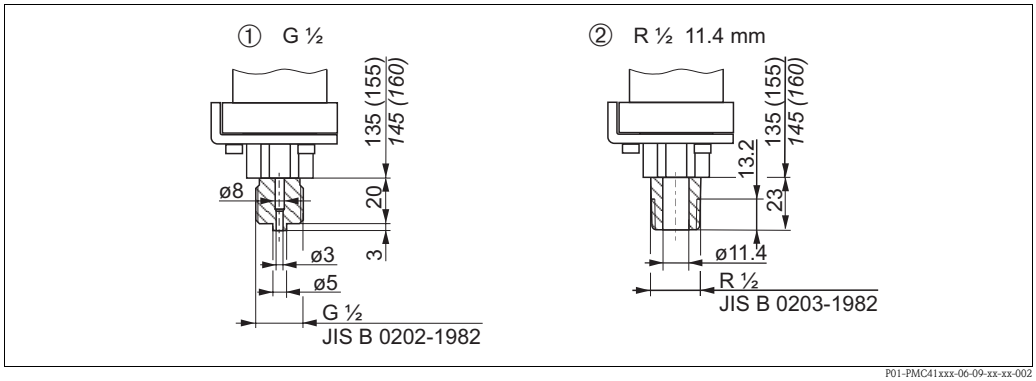

Process connections PMC41, thread JIS

1 Version 1S: thread JIS B0202 G 1/2 (male) material: AISI 316L/1.4435
2 Version 1K: thread JIS B0203 R 1/2 (male) material: AISI 316L/1.4435

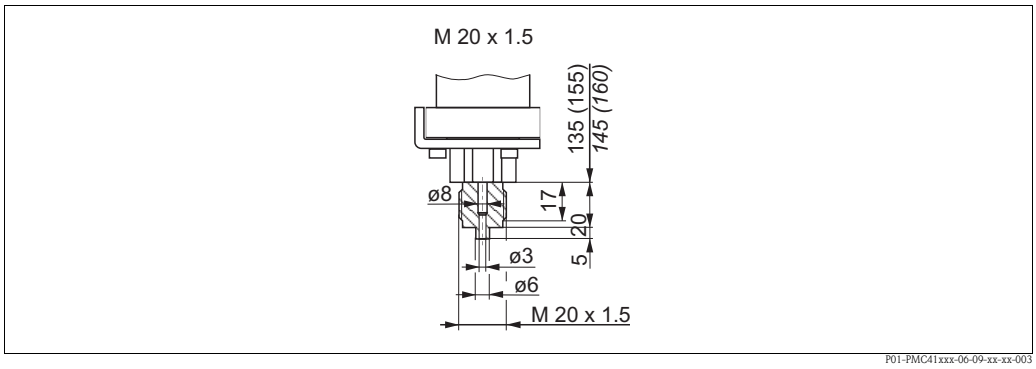

Process connection PMC41, version 1T: thread DIN 13 M20 x 1.5 bore 3 mm, material AISI 316L /1.4435

Process connections PMC45 (with ceramic measuring diaphragm)

Note!
- The installation heights in brackets apply to housings with a high cover (for optional display). Installation heights written in italics apply to devices with an aluminum housing.
- Devices with an aluminum housing, high cover, threaded connection or hygienic connection weigh approx. 2.1 kg. The weights for devices with an aluminum housing, high cover and flange are indicated in the tables as of Page 31 ff. Devices with a stainless steel housing weigh approx. 300 g less.
- Many process connections with an EPDM or HNBR seal are 3A-approved for PMC45. This means that a 3A-approved process connection with an EPDM or HNBR seal must be selected when ordering for the 3A approval for the PMC45 version to be valid. → For ordering information on EPDM or HNBR seals, see Page 64 "Ordering information PMC45", feature 80 "Sensor seal", version 2 or 4.

Thread, flush-mounted diaphragm

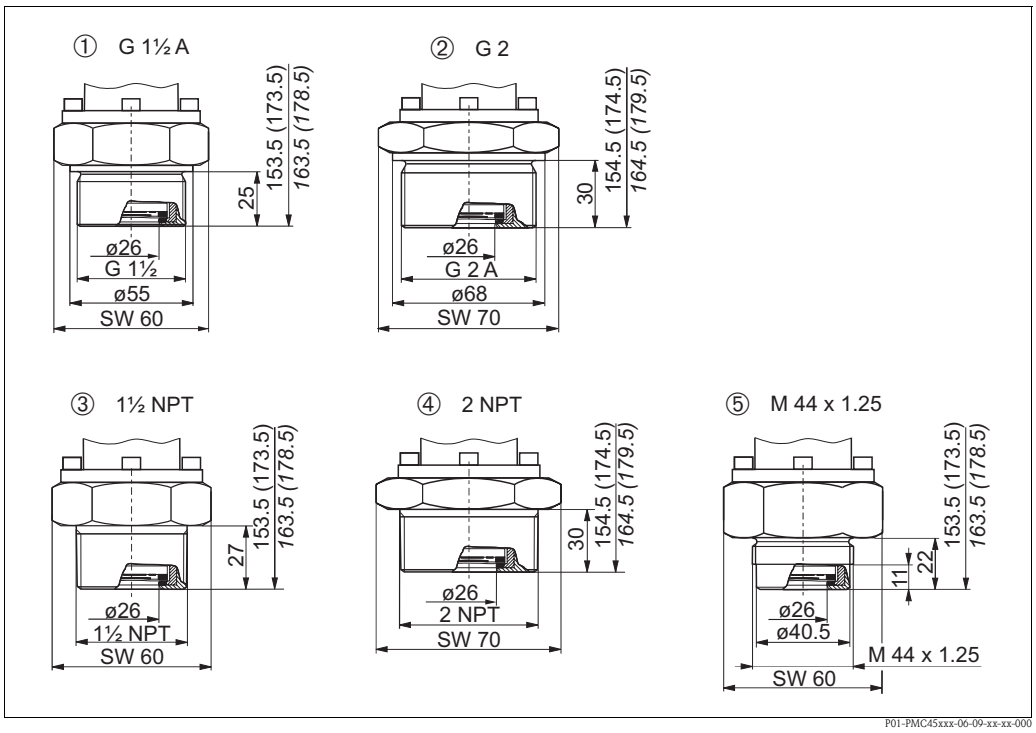

Process connections PMC45, threaded connection, material AISI 316L/1.4435

1 Version AG: thread ISO 228 G1 1/2 A
Endress+Hauser also offers welding necks for this process connection. See the following section.
2 Version AR: thread ISO 228 G 2 A
3 Version BF: thread ANSI 1 1/2 MNPT
4 Version BR: thread ANSI 2 MNPT
5 Version XK: thread DIN 13 M 44x1.25

Welding neck G 1 1/2

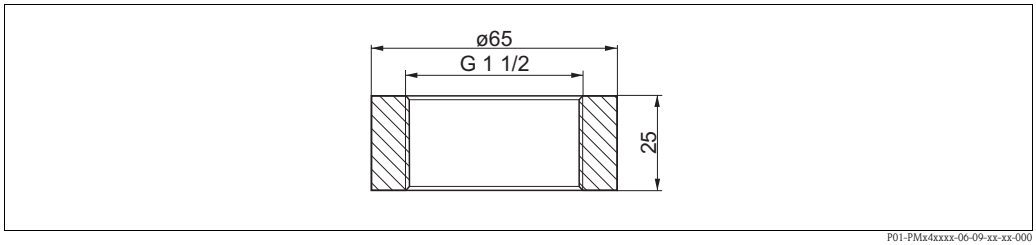

Welding neck for process connection thread ISO 228 G 1 1/2 A (version AG)
order no.: 52024469, order no. with 3.1 inspection certificate: 52024470

Note!
Endress+Hauser offers a pressure sensor dummy for the welding necks with order numbers 52024469 and 52024470. Order number for pressure sensor dummy: 52024471

Tri-Clamp, flush-mounted diaphragm

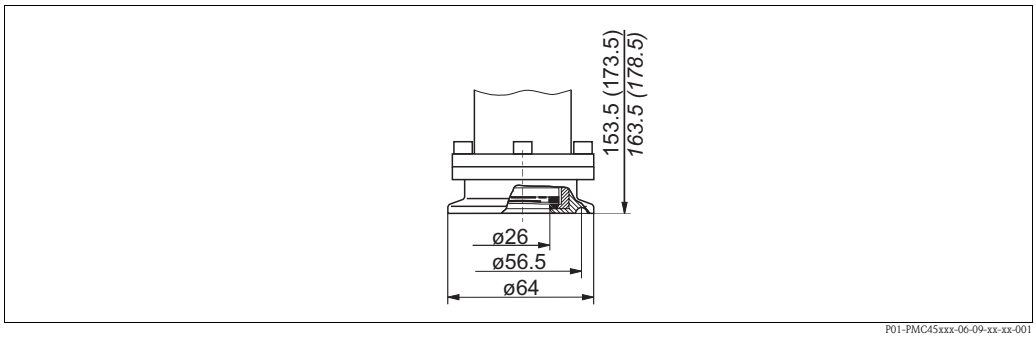

Process connection PMC45, version DL: Tri-Clamp, ISO 2852 DN 51 (2")/DIN 32676 DN 50, material AISI 316L/1.4435 EHEDG, 3A with HNBR/EPDM seal

Hygienic connections, flush-mounted diaphragm

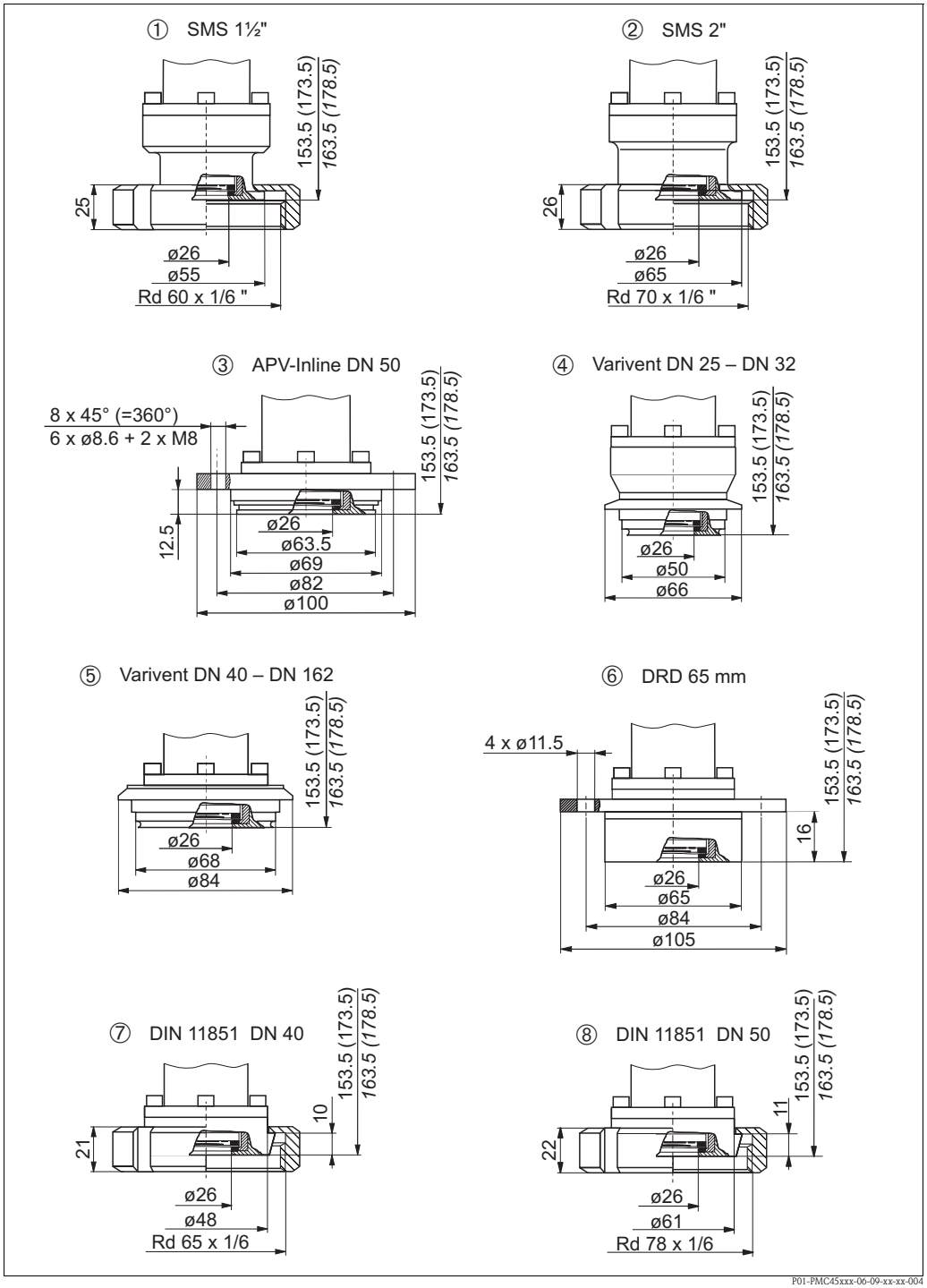

Process connections PMC45, hygienic connections, material AISI 316L/1.4435
surface roughness of the surfaces in contact with the medium ≤ 0.8 µm as standard. Lower surface roughness on request.

1 *Version EG: SMS 1 1/2" PN 25, 3A with HNBR/EPDM seal*
2 *Version EL: SMS 2" PN 25, 3A with HNBR/EPDM seal*
3 *Version HL: APV-Inline DN 50 PN 40, 3A with HNBR/EPDM seal*
4 *Version LB: Varivent type F for pipes DN 25 – DN 32 PN 40, EHEDG, 3A with HNBR/EPDM seal*
5 *Version LL: Varivent type N for pipes DN 40 – DN 162 PN 40, EHEDG, 3A with HNBR/EPDM seal*
6 *Version KL: DRD 65 mm PN25, EHEDG, 3A with HNBR/EPDM seal; Endress+Hauser offers a welding flange with PTFE seals for flush-mounted installation of a device with a DRD flange. See the following page.*
7 *Version AH: DIN 11851 DN 40 PN 40, EHEDG, 3A with HNBR/EPDM seal*
8 *Version AL: DIN 11851 DN 50 PN 25, EHEDG, 3A with HNBR/EPDM seal*

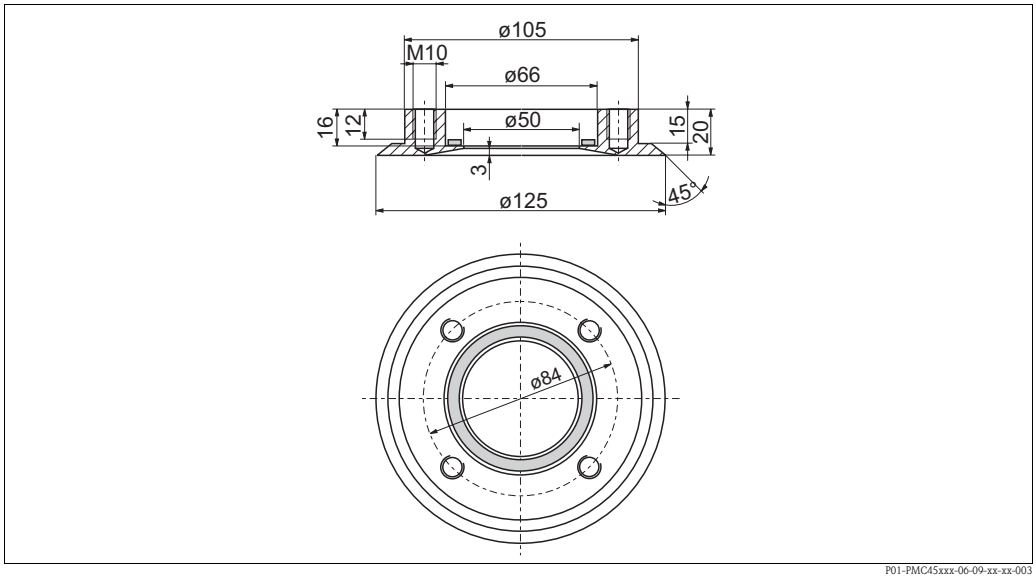

Welding flange for flush-mounted installation for devices with a DRD flange.
Order number: 52002041, material: AISI 316L/1.4435;
Order number with 3.1: 52011899, material: AISI 316L/1.4435;
Only PTFE sealing ring: order number: 916783-0000;

Aseptic couplings

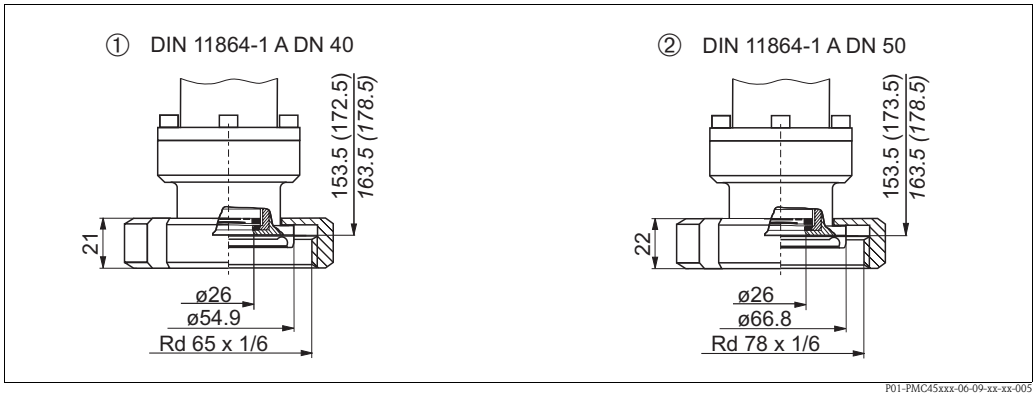

Process connections PMC45, Aseptic couplings, material AISI 316L/1.4435
Surface roughness of the surfaces in contact with the medium ≤0.8 µm as standard. Lower surface roughness on request.

1 *Version AS: aseptic DIN 11864–1 form A DN 40 for pipes to DIN 11850, EHEDG, 3A with HNBR/EPDM seal*
2 *Version AT: aseptic DIN 11864–1 form A DN 50 for pipes to DIN 11850, EHEDG, 3A with HNBR/EPDM seal*

EN/DIN flanges, connection dimensions as per EN 1092-1/DIN 2527

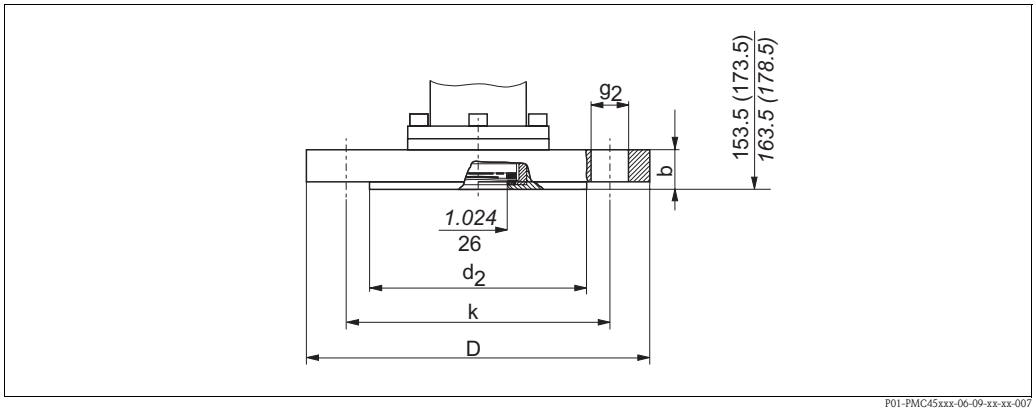

P01-PMC45xxx-06-09-xx-xx-007

Process connection PMC45, EN/DIN flange

	Flange							Boltholes			
Version	**Material**	**Nominal diameter** [mm]	**Nominal pressure** [bar]	**Shape** [1]	**Diameter D** [mm]	**Raised face**	**Thickness b** [mm]	**Quantity**	**Diameter g_2** [mm]	**Hole circle k** [mm]	**Max. total weight** [kg]
EK	AISI 316L	DN 50	PN 10-40	B1 (D)	165	102	20	4	18	125	3.3
WK	AISI 316L [2]			–		–					
EU	AISI 316L	DN 80	PN 10-40	B1 (D)	200	138	24	8	18	160	5.8
WU	AISI 316L [2]			–		–					

1) Designations as per DIN 2527 in brackets

2) ECTFE coating on AISI 316L. Avoid electrostatic charge at the plastic surfaces when installing in hazardous areas.

ANSI flanges, connection dimensions as per ANSI B 16.5, raised face RF

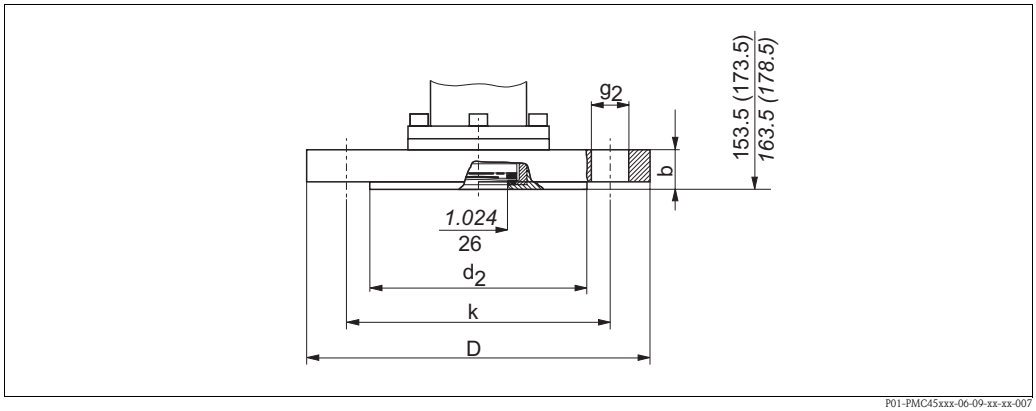

P01-PMC45xxx-06-09-xx-xx-007

Process connection PMC45, ANSI flange with raised face RF

	Flange						Boltholes			
Version	**Material**	**Nominal diameter** [in]	**Class** [lb./sq.in]	**Diameter** **D** [in] *[mm]*	**Thickness** **b** [in] *[mm]*	**Raised face** **g** [in] *[mm]*	**Quantity**	**Diameter** g_2 [in] *[mm]*	**Hole circle** **k** [in] *[mm]*	**Max. total weight** [kg]
K1	AISI 316/ 316L [1]	1 1/2	150	5 *127*	0.69 *17.5*	2.88 *73.2*	4	0.62 *15.7*	3.88 *98.6*	3.3
K2	AISI 316/ 316L [1]	1 1/2	300	6.12 *155.4*	0.81 *20.6*	2.88 *73.2*	4	0.88 *22.4*	4.5 *114.3*	3.3
KJ	AISI 316/ 316L [1]	2	150	6 *152.4*	0.75 *19.1*	3.62 *91.9*	4	0.75 *19.1*	4.75 *120.7*	3.3
KK	AISI 316/ 316L [1]	2	300	6.5 *165.1*	0.88 *22.4*	3.62 *91.9*	8	0.75 *19.1*	5 *127*	4.1
KU	AISI 316/ 316L [1]	3	150	7.5 *190.5*	0.94 *23.9*	5 *127*	4	0.75 *19.1*	6 *152.4*	5.8
KV	AISI 316/ 316L [1]	3	300	8.25 *209.5*	1.12 *28.4*	5 *127*	8	0.88 *22.4*	6.62 *168.1*	7.9
KW	AISI 316/ 316L [1]	4	150	9 *228.6*	0.94 *23.9*	6.19 *157.2*	8	0.75 *19.1*	7.5 *190.5*	7.9
KX	AISI 316/ 316L [1]	4	300	10 *254*	1.25 *31.8*	6.19 *157.2*	8	0.88 *22.4*	7.88 *200.2*	7.9
VJ	ECTFE [2]	2	150	6 *152.4*	0.75 *19.1*	3.62 *91.9*	4	0.75 *19.1*	4.75 *120.7*	3.3
VU	ECTFE [2]	3	150	7.5 *190.5*	0.94 *23.9*	5 *127*	4	0.75 *19.1*	6 *152.4*	5.5
VN	ECTFE [2]	4	150	9 *228.6*	0.94 *23.9*	6.19 *157.2*	8	0.75 *19.1*	7.5 *190.5*	7.9
ZJ	[3]	2	150	6 *152.4*	0.75 *19.1*	3.62 *91.9*	4	0.75 *19.1*	4.75 *120.7*	3.3
ZU	PVDF [3]	3	150	7.5 *190.5*	0.94 *23.9*	5 *127*	4	0.75 *19.1*	6 *152.4*	5.5

1) Combination of AISI 316 for required pressure resistance and AISI 316L/1.4435 for required chemical resistance (dual rated)

2) ECTFE coating on AISI 316L/1.4435. Avoid electrostatic charge at the plastic surfaces when installing in hazardous areas.

3) Max.: 15 bar (225 psi), max.: –10 to +60 °C (+14 to +140 °F)

JIS flange, connection dimensions as per JIS B 2220, raised face RF

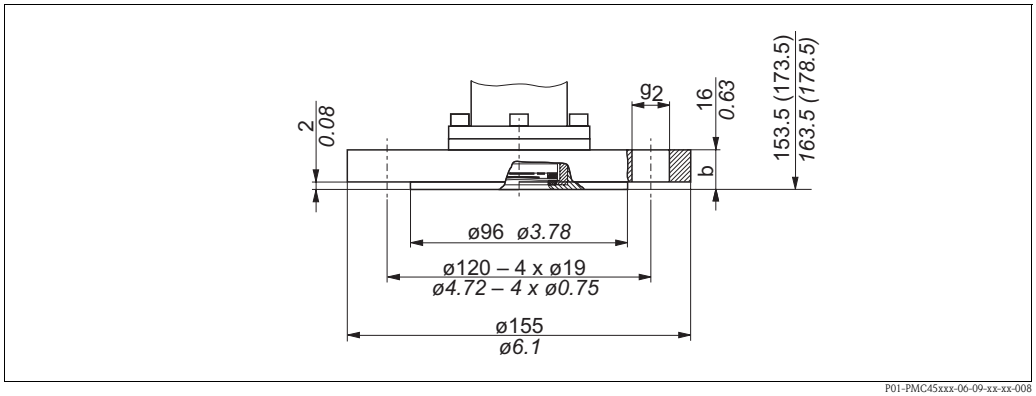

P01-PMC45xxx-06-09-xx-xx-008

Process connection PMC45, version RI: JIS flange 10 K 50 A, raised face RF, material AISI 316L/1.4435, max. total weight: 3.5 kg

Universal process adapter

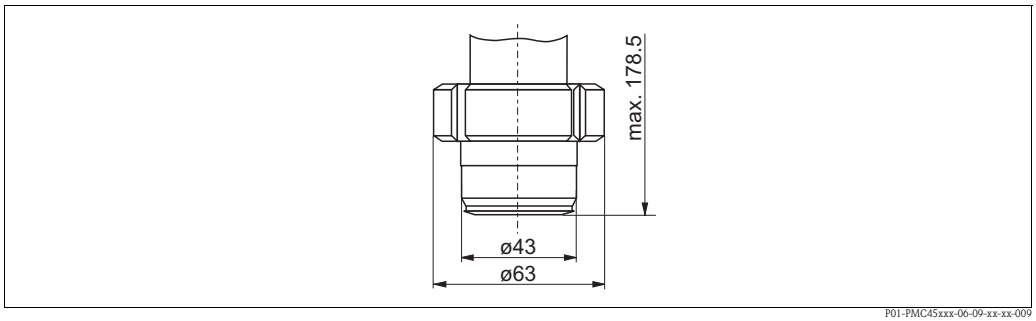

P01-PMC45xxx-06-09-xx-xx-009

Process connection PMC45, version HA: universal process adapter, PN 25, material AISI 316L/1.4435
A silicone molded seal is enclosed with the process connection.

Welding neck for universal process adapter

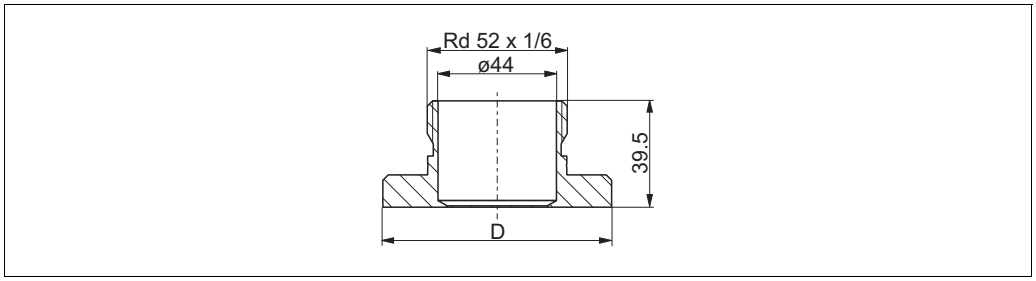

P01-PMC45xxx-06-xx-xx-xx-000

Diameter D	Material	Order number
65 mm	AISI 316L	214880-0002
65 mm	AISI 316L with inspection certificate EN 10204 3.1 material	52010174
85 mm	AISI 316L	52006262
85 mm	AISI 316L with inspection certificate EN 10204 3.1 material	52010173

Weld spud

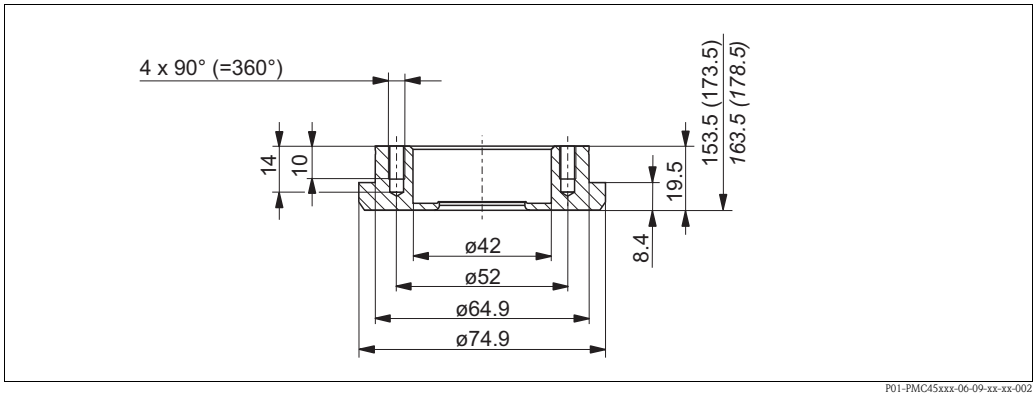

P01-PMC45xxx-06-09-xx-xx-002

Version XU: weld spud 75 mm, material AISI 316L/1.4435

Process connections PMP41 (with metallic measuring diaphragm)

Note!
- The installation heights in brackets apply to housings with a high cover (for optional display). Installation heights written in italics apply to devices with an aluminum housing.

Thread, inner diaphragm

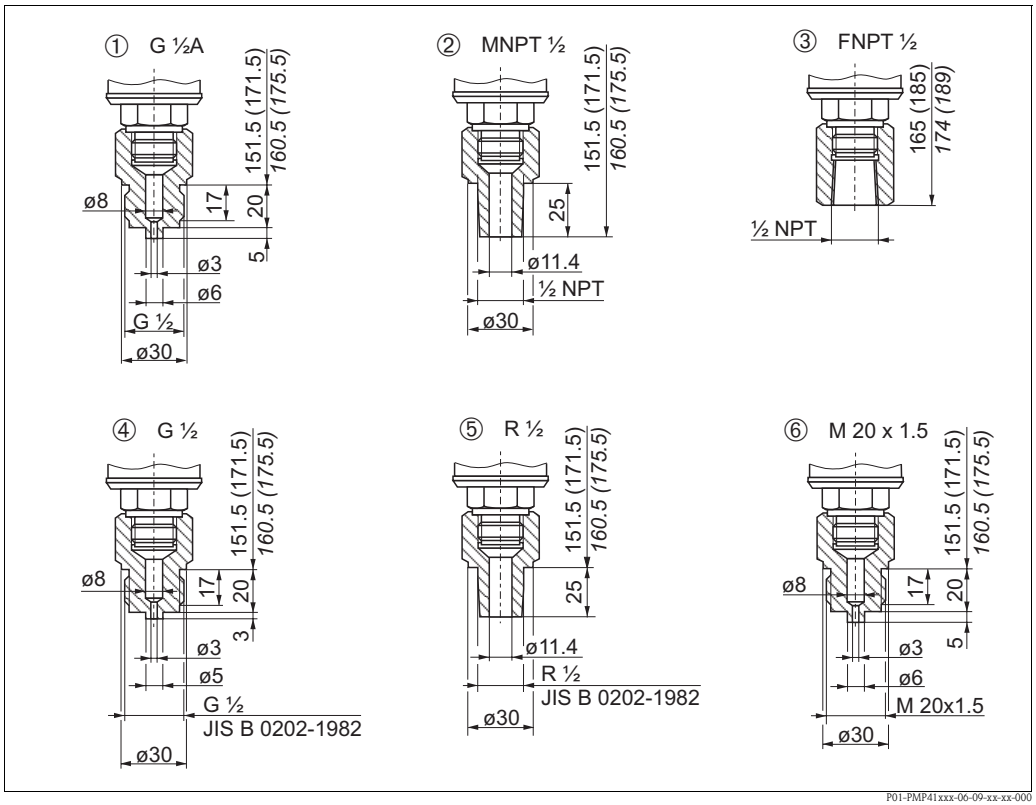

Process connections PMP41, material: AISI 316L/1.4435

1 *Version 1M: thread ISO 228 G 1/2 A*
2 *Version 1G: thread ANSI MNPT 1/2*
3 *Version 1X: thread ANSI FNPT 1/2*
4 *Version 1S: thread JIS B0202 G 1/2 (male)*
5 *Version 1K: thread JIS B0203 R 1/2 (male)*
6 *Version 1T: thread DIN 13 M 20x1.5*

Note!
The 1M, 1G, 1X, 1S, 1K and 1T versions listed above are available as threaded or welded versions. Using feature 80 "Seal; Fill fluid" in the order code, select the version in conjunction with the seal and the filling oil.
→ See the following page also.

Threaded versions
Can be selected in conjunction with versions 1, H, P for feature 80 "Seal; Fill fluid" in the order code
(→ see Page 64)

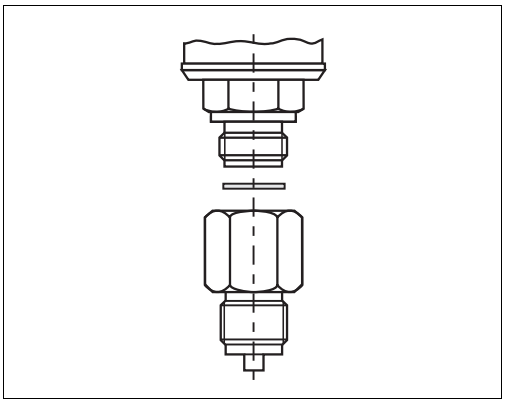

P01-PMP41xxx-06-09-xx-xx-004

Welded versions
Can be selected in conjunction with versions A, C, D for feature 80 "Seal; Fill fluid" in the order code
(→ see Page 64)

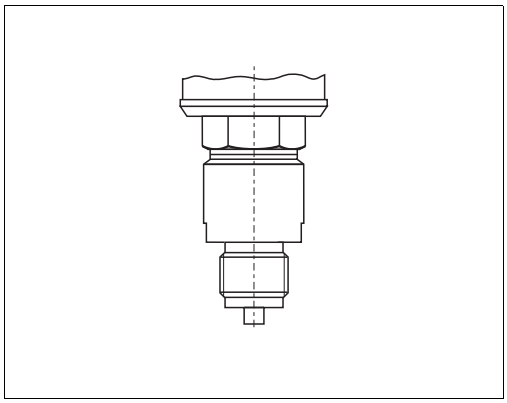

P01-PMP41xxx-06-09-xx-xx-005

Threaded connection, flush-mounted diaphragm

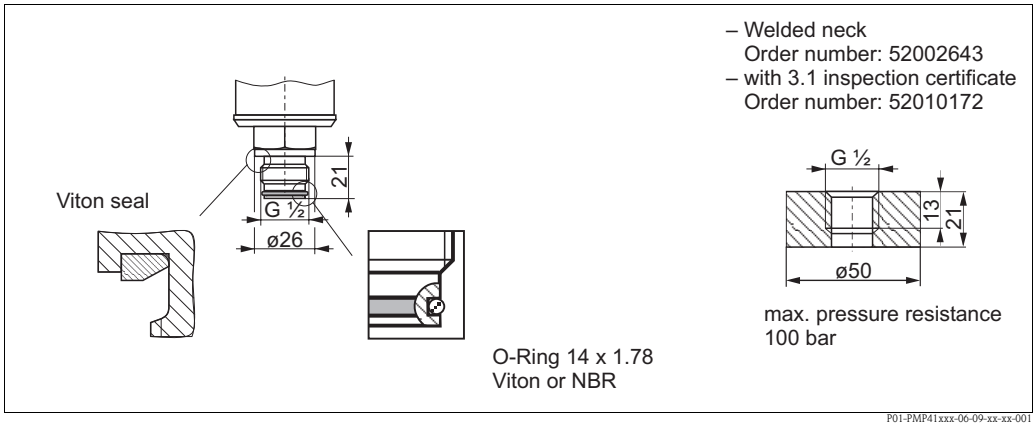

P01-PMP41xxx-06-09-xx-xx-001

Process connection PMP41, version 1D: thread ISO 228 G 1/2 with O-ring for welding neck, material AISI 316L/1.4435
This process connection can be selected with versions 1, 4 or P for feature 80 "Seal; Fill fluid" (→ see Page 64).

Note!
Endress+Hauser offers a pressure sensor dummy for the welding necks with order numbers 52002643 and 52010172. Order number for pressure sensor dummy: 52005082

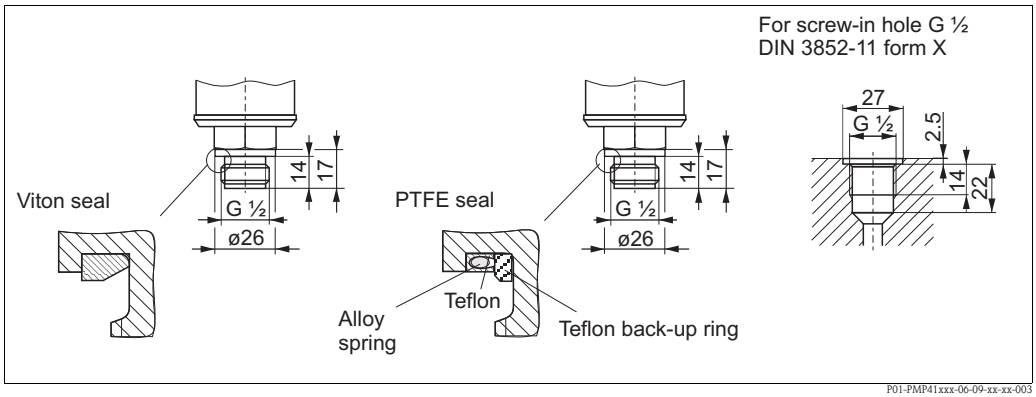

P01-PMP41xxx-06-09-xx-xx-003

Process connection PMP41, version 1F: thread G 1 1/2 A; screw-in adapter to DIN 3852-11 form E with seal, material AISI 316L/1.4435
This process connection can be selected with versions F or H for feature 80 "Seal; Fill fluid"(→ see Page 64).

Process connections PMP45 (with metallic measuring diaphragm)

Note!
- The installation heights in brackets apply to housings with a high cover (for optional display). Installation heights written in italics apply to devices with an aluminum housing.

Threaded connection, flush-mounted diaphragm

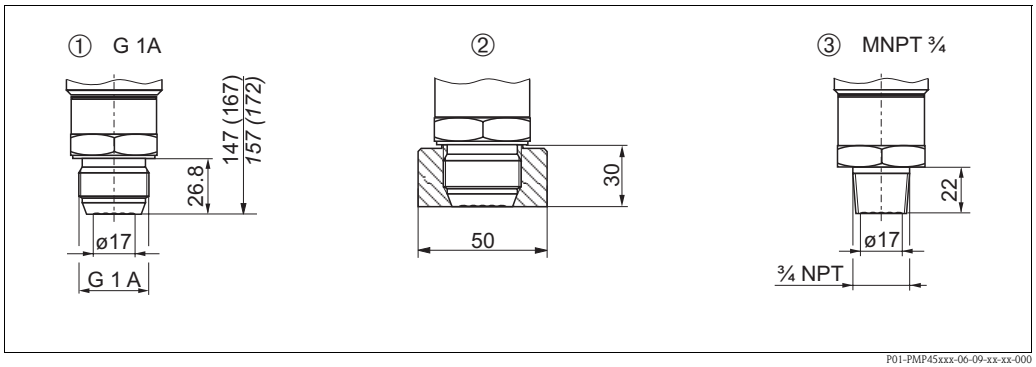

Process connections PMP45, flush-mounted threaded connection, material: AISI 316L/1.4435

1 *Version CD: thread ISO 228 G 1 A, seal metal taper AISI 316L/1.4435 for welding neck see 2.*
2 *Welding neck for process connection thread ISO 228 G 1 A (version CD) order number: 52005087; order number with 3.1 inspection certificate: 52010171 max. pressure resistance: 100 bar*
3 *Version BB: thread ANSI 3/4 MNPT*

Note!
Endress+Hauser offers a pressure sensor dummy for the welding necks with order numbers 52005087 and 52010171. Order number for pressure sensor dummy: 52005272

Clamp connections

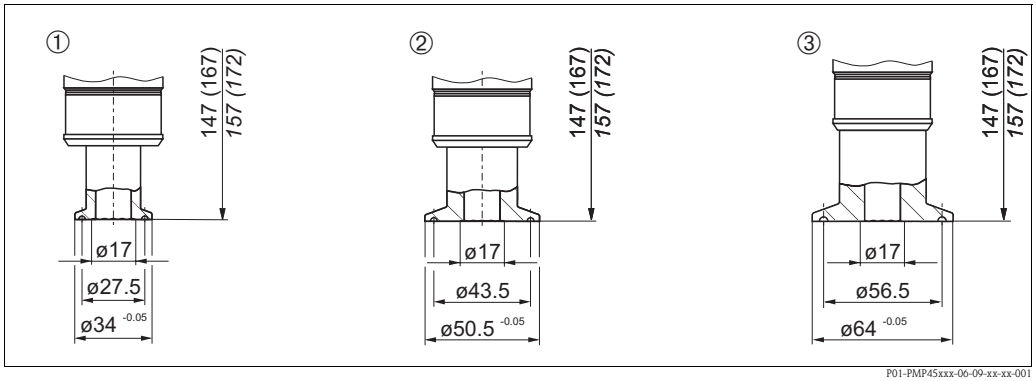

Process connections PMP45, clamp connections, material AISI 316L/1.4435
Surface roughness of the surfaces in contact with the medium ≤ 0.8 µm as standard. Lower surface roughness on request.

1 *Version DA: Clamp ISO 2852 DN 22 (3/4"), 3A, DIN 32676 DN 20*
2 *Version DB: Tri-Clamp ISO 2852 DN 25 – DN 38 (1" – 1 1/2"), 3A, DIN 32676 DN 25 – DN 40*
3 *Version DL: Tri-Clamp ISO 2852 DN 40 – DN 51 (2"), 3A, DIN 32676 DN 50*

Hygienic connections

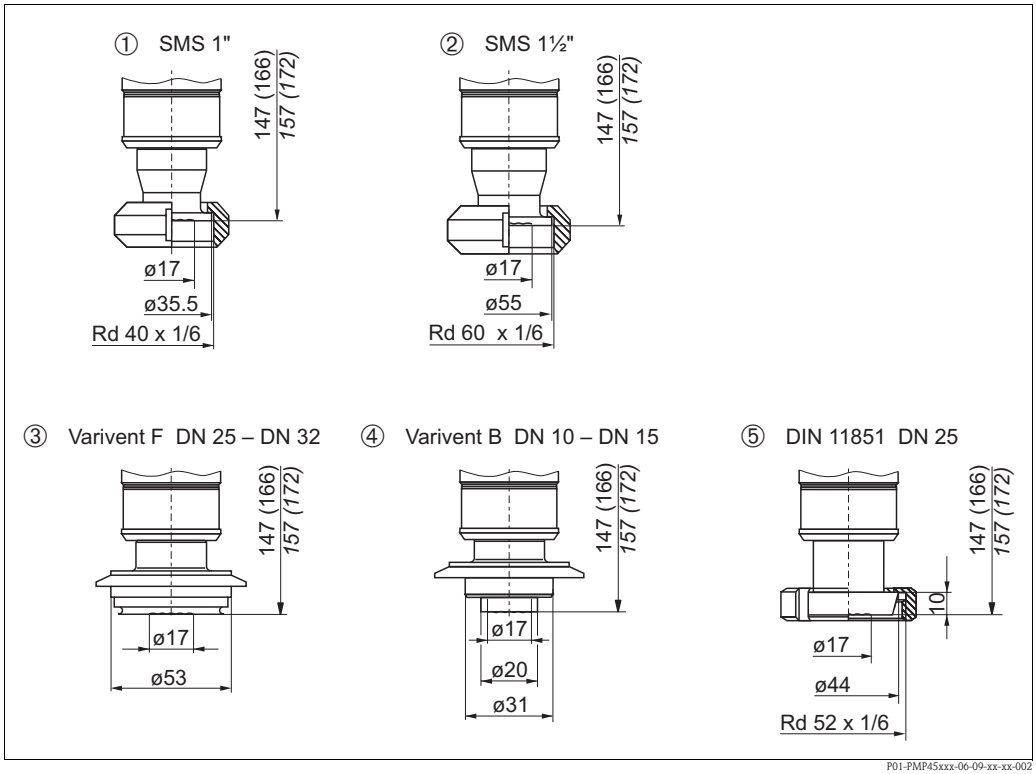

Process connections PMP45, hygienic connections, material AISI 316L/1.4435

1 *Version EB: SMS 1" PN 25, 3A*
2 *Version EG: SMS 1 1/2" PN 25, 3A*
3 *Version LB: Varivent type F for pipes DN 25 – DN 32 PN 40, 3A*
4 *Version LG: Varivent type B for pipes DN 10 – DN 15 PN 40, 3A*
5 *Version AB: DIN 11851 DN 25 PN 40, 3A*

Process connections PMP46 (with metallic measuring diaphragm)

Note!

- The following tables contain information on the temperature coefficients "T_K Process" and "T_K Ambient". The values given are typical values. These temperature coefficients apply to silicone oil and the membrane material AISI 316L/1.4435. For other filling oils, these temperature coefficients must be multiplied by the T_K correction factor of the corresponding filling oil. For the T_K correction factors, see Page 53, "Diaphragm seal filling oils" section.
- With regard to the temperature coefficient "T_K Ambient", devices with 100 mm temperature isolation behave like devices with the same process connection with 1 m capillary, i.e.
  - For devices with high-temperature oil (version "G", feature 80 "Transmitter mounting; Fill fluid" → see Page 70), the temperature coefficient "T_K Ambient" must be taken from the diagrams on Pages 53 to 55 for the corresponding process connection for 1 m capillary and then multiplied by the T_K correction factor for high-temperature oil (0.72).
  - For devices with vegetable oil (version "L", feature 80 "Transmitter mounting; Fill fluid" → see Page 70), the temperature coefficient "T_K Ambient" must be taken from the diagrams on Pages 53 to 55 for the corresponding process connection for 1 m capillary and then multiplied by the T_K correction factor for vegetable oil (1.05).
- In addition, the temperature coefficient "T_K Ambient" is listed in relation to the capillary length for the diaphragm seal versions which can be supplied with capillaries as standard. This information can be found on Page 53 ff, "Influence of the temperature on the zero point" section.
- The tables and drawings always give the maximum installation height for the device version, i.e. this installation height applies to a device with an aluminum housing and a high cover and without any capillaries. The installation heights for devices with a stainless steel housing and a high cover are approx. 5 mm less.
- The tables always give the maximum total weight for the device version, i.e. this total weight applies to a device with an aluminum housing and a high cover. Devices with a stainless steel housing weigh approx. 300 g less.
- The following drawings are schematic drawings. This means that the dimensions of a diaphragm seal supplied can deviate from the dimensions indicated in this document.

Tri-Clamp ISO 2852

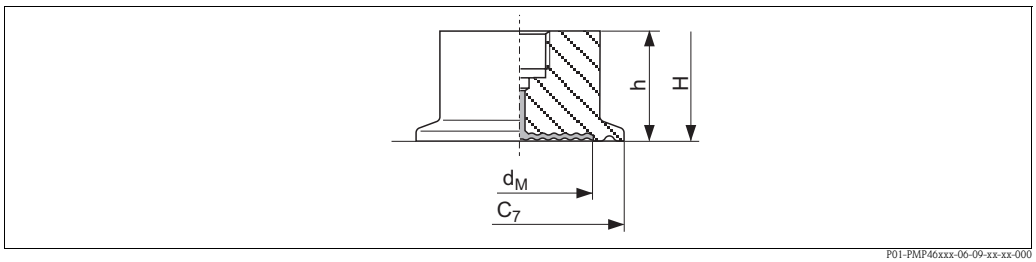

Process connection PMP46, material: AISI 316L/1.4435, 3A, surface roughness of the surfaces in contact with the medium $R_a \leq 0.8$ µm as standard. Lower surface roughness on request.

Version	Nominal diameter ISO 2852	Nominal diameter DIN 32676	Nominal diameter	Diameter C_7	Max. diaphragm diameter d_M	Height h	T_K Ambient	T_K Process	Max. installa-tion height H	Max. total weight
			[in]	[mm]	[mm]	[mm]	[mbar/10 K]		[mm]	[kg]
DF [1]	DN 25	DN 25	1	50.5	24	37	+15.33	+2.85	227	1.6
DG	DN 38	DN 40	1 1/2	50.5	34	37	+8.14	+1.91	227	1.6
DL[1]	DN 51	DN 50	2	64	48	45	+3.45	+1.28	235	1.9
DU	DN 76.1	–	3	91	73	45	+0.3	+0.18	235	2.4

1) Diaphragm seal versions in conformity with ASME-BPE for use in biochemical processes, wetted surfaces $R_a \leq 0.4$ µm (15.75 µin; 180 grit), electropolished; to be ordered using feature 60 "Additional option", version "P" in the order code

Clamp pipe diaphragm seal (RDM)

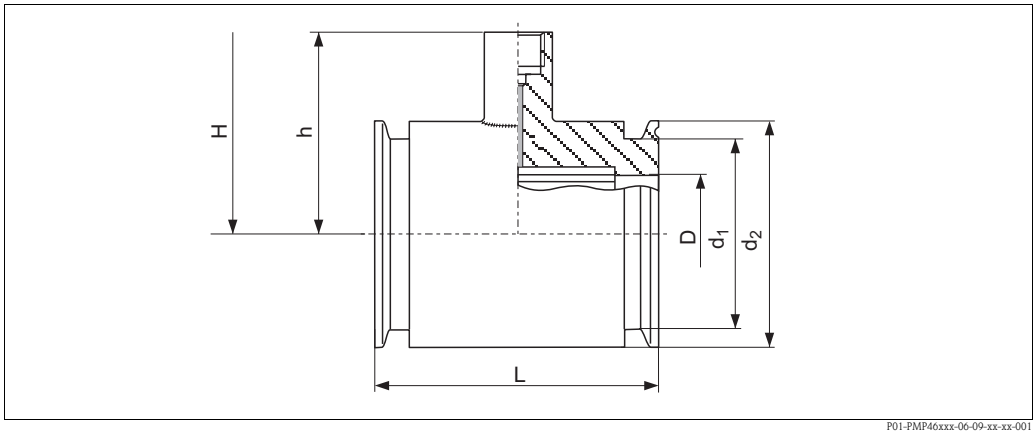

Process connection PMP46, material AISI 316L/1.4435, surface roughness of the surfaces in contact with the medium $R_a \leq 0.8\,\mu m$ as standard. Lower surface roughness on request.

Version	Nominal diameter ISO 2852	Nominal diameter	Diameter D	Diameter d_1	Diameter d_2	Height h	Face-to-face length L	T_K Ambient	T_K Process	Max. installa-tion height H	Max. total weight
		[inch]	[mm]	[mm]	[mm]	[mm]	[mm]	[mbar/10 K]		[mm]	[kg]
SA	DN 10	3/4	10.5	18	25	60	140	+5.4	+3.1	255	2.9
SB [1]	DN 25	1	22.5	43.5	50.5	67	126	+7.75	+4.49	262	2.9
SG [1, 2]	DN 38	1 1/2	35.5	43.5	50.5	67	126	+5.17	+3.46	262	2.2
SL [1, 2, 3]	DN 51	2	48.6	56.5	64	79	100	+3.56	+2.69	274	2.9

1) Version is Tri-Clamp compatible

2) Including 3.1 and pressure test as per Pressure Equipment Directive, Category II

3) With 3A approval

SMS nozzles with coupling nut

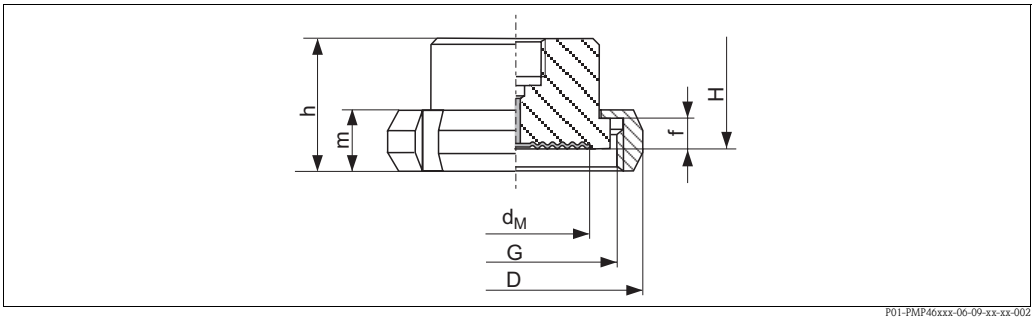

Process connection PMP46, material AISI 316L/1.4435, 3A, surface roughness of the surfaces in contact with the medium $R_a \leq 0.8\,\mu m$ as standard. Lower surface roughness on request.

Version	Nominal diameter	Nominal pressure	Diameter D	Adapter height f	Thread G	Height m	Height h	Max. diaphragm diameter d_M	T_K Ambient	T_K Process	Max. installation height H	Max. total weight
	[inch]	[bar]	[mm]	[mm]		[mm]	[mm]	[mm]	[mbar/10 K]		[mm]	[kg]
EG	1 1/2	PN 25	74	4	Rd 60 – 1/6	25	57	36	+8.18	+2.59	252	1.8
EL	2	PN 25	84	4	Rd 70 – 1/6	26	62	48	+5.4	+1.76	257	2.2

APV-RJT nozzles with coupling nut

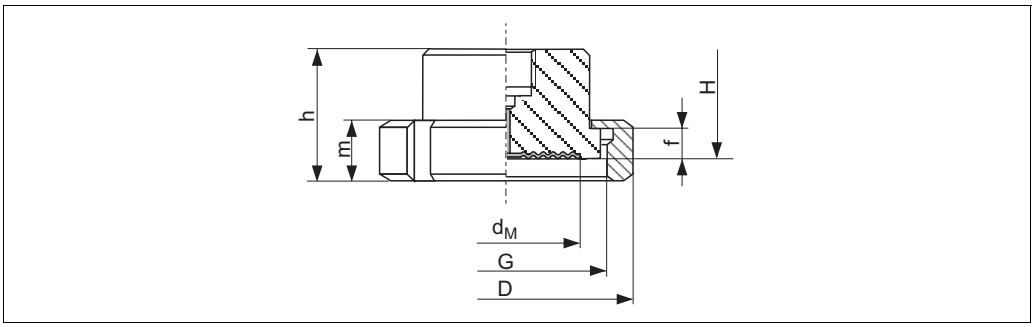

Process connection PMP46, material AISI 316L/1.4435, surface roughness of the surfaces in contact with the medium $R_a \leq 0.8\,\mu m$ as standard. Lower surface roughness on request.

Version	Nominal diameter	Nominal pressure PN	Diameter D	Adapter height f	Thread G	Height m	Height h	Max. diaphragm diameter d_M	T_K Ambient	T_K Process	Max. installation height H	Max. total weight
	[inch]	[bar]	[mm]	[mm]		[mm]	[mm]	[mm]	[mbar/10 K]		[mm]	[kg]
FG	1 1/2	PN 40	72	6.4	2 5/16 – 1/8"	21	60	28	+8.18	+2.59	255	2.0
FL	2	PN 40	86	6.4	2 7/8 – 1/8"	22	61	38	+5.4	+1.76	256	2.2

APV-ISS nozzles with coupling nut (3A)

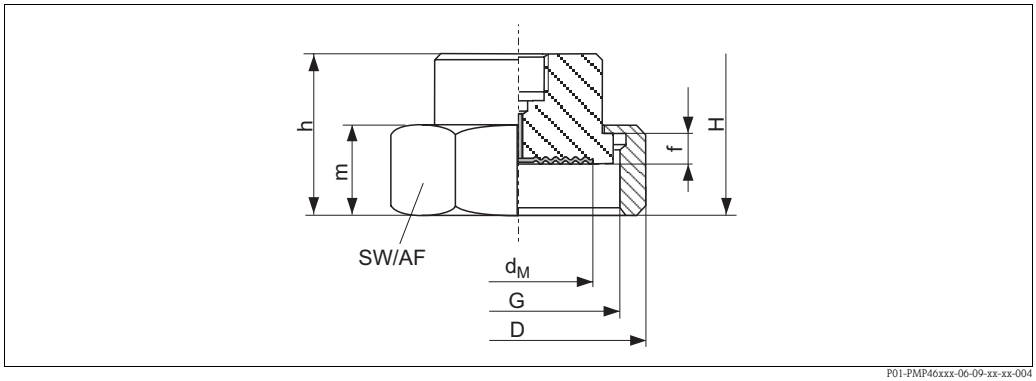

P01-PMP46xxx-06-09-xx-xx-004

Process connection PMP46, material AISI 316L/1.4435, 3A, surface roughness of the surfaces in contact with the medium $R_a \leq 0.8\,\mu m$ as standard. Lower surface roughness on request.

Version	Nominal diameter [inch]	Nominal pressure [bar]	Diameter D [mm]	Adapter height f [mm]	Thread G	Height m [mm]	Across flats AF	Height h [mm]	Max. diaphragm diameter d_M [mm]	T_K Ambient [mbar/10 K]	T_K Process [mbar/10 K]	Max. installation height H [mm]	Max. total weight [kg]
GG	1 1/2	PN 40	72	4	2" – 1/8"	30	62	70	34	+8.14	+2.59	265	1.9
GL	2	PN 40	89	4	2 1/2" – 1/8"	30	77	70	45	+5.4	+1.76	265	2.2

DRD 65 mm

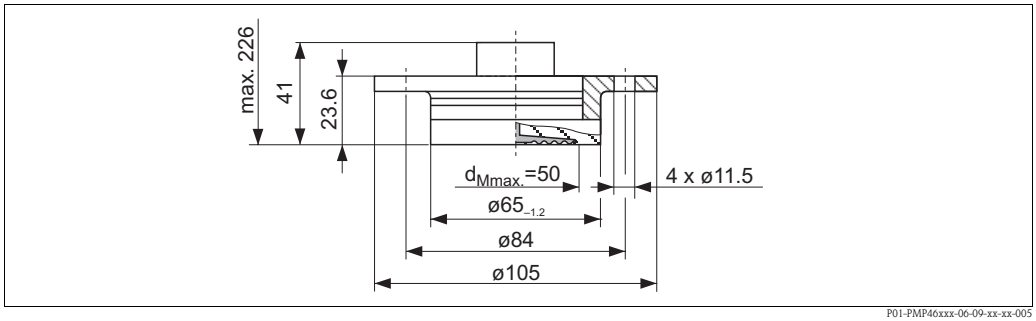

P01-PMP46xxx-06-09-xx-xx-005

Process connection PMP46, version KL: material AISI 316L/1.4435, 3A, surface roughness of the surfaces in contact with the medium $R_a \leq 0.8\,\mu m$ as standard. Lower surface roughness on request.

Version	Nominal pressure	T_K Ambient [mbar/10 K]	T_K Process [mbar/10 K]	Max. total weight [kg]
KL	PN 25	+2.26	+0.89	2.0

Varivent

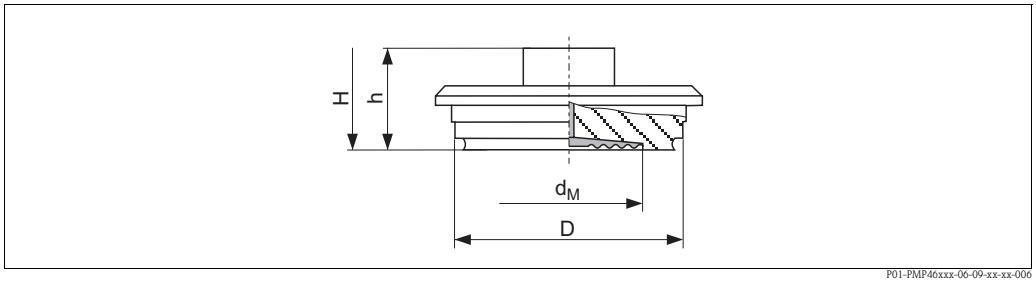

Process connection PMP46, material AISI 316/1.4435, 3A, surface roughness of the surfaces in contact with the medium $R_a \leq 0.8$ µm as standard. Lower surface roughness on request.

Version	Description	Nominal pressure [bar]	Diameter D [mm]	Height h [mm]	Max. diaphragm diameter d_M [mm]	T_K Ambient [mbar/10 K]	T_K Process [mbar/10 K]	Max. installation height H [mm]	Max. total weight [kg]
LB	Type F for pipes DN 25 – DN 32	PN 40	50	55	30	+7.75	+4.49	250	1.8
LL [1]	Type N for pipes DN 40 – DN 162	PN 40	68	55	50	+2.26	+0.89	250	2.1

1) Diaphragm seal versions in conformity with ASME-BPE for use in biochemical processes, wetted surfaces $R_a \leq 0.4$ µm (15.75 µin; 180 grit), electropolished; to be ordered using feature 60 "Additional option", version "P" in the order code

Taper adapter with coupling nut, DIN 11851 (dairy fitting)

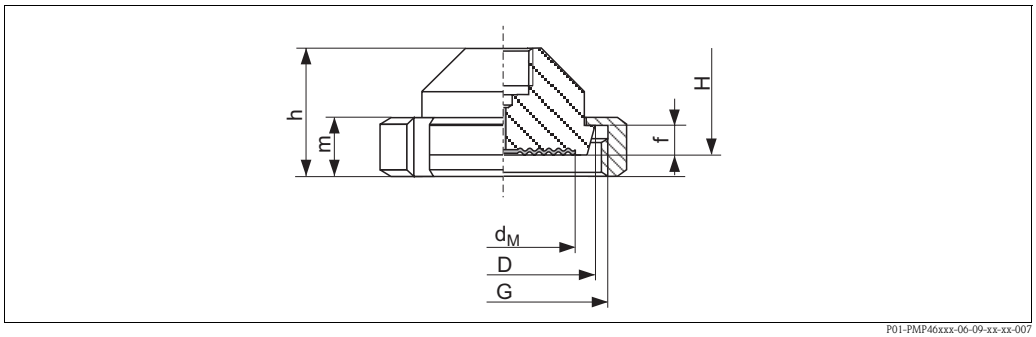

Process connection PMP46, material AISI 316L/1.4435, 3A, surface roughness of the surfaces in contact with the medium $R_a \leq 0.8$ µm as standard. Lower surface roughness on request.

		Taper adapter			Slotted nut			Diaphragm seal				
Version	Nominal diameter [mm]	Nominal pressure [bar]	Diameter D [mm]	Adapter height f [mm]	Thread G	Height m [mm]	Height h [mm]	Max. diaphragm diameter d_M [mm]	T_K Ambient [mbar/10 K]	T_K Process [mbar/10 K]	Max. installation height H [mm]	Max. total weight [kg]
AG	DN 32	PN 40	50	10	Rd 58 x 1/6	21	54	32	+8.14	+2.59	249	1.9
AH	DN 40	PN 40	56	10	Rd 65 x 1/6	21	53	38	+5.4	+1.76	248	2.0
AL	DN 50	PN 25	68.5	11	Rd 78 x 1/6	22	48	46	+2.21	+0.88	243	2.3

Pipe diaphragm seal, threaded adapter DIN11851 (dairy fitting)

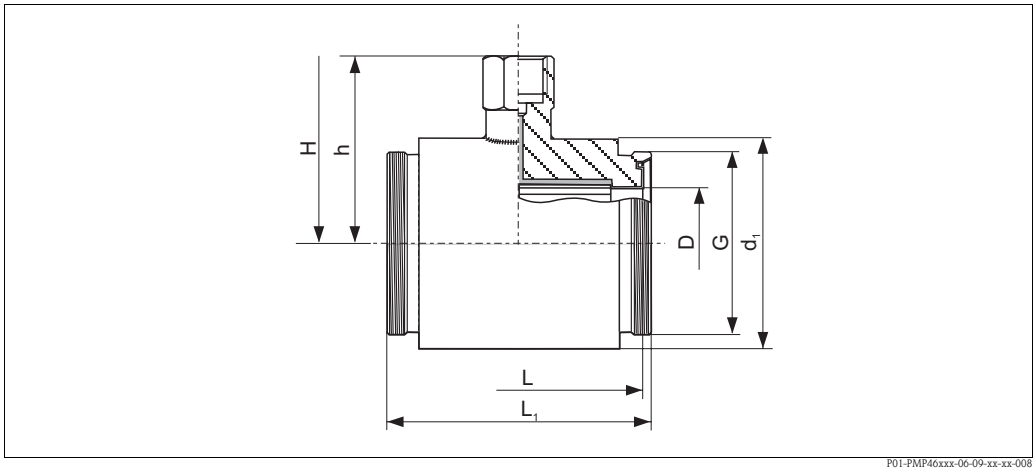

Process connection PMP46, material AISI 316L/1.4435, 3A, surface roughness of the surfaces in contact with the medium $R_a \leq 0.8\ \mu m$ as standard. Lower surface roughness on request.

Version	Nominal diameter	Nominal pressure	Diameter D	Diameter d_1	Thread G	Face-to-face length L	Total length L_1	Height h	T_K Ambient	T_K Process	Max. installation height H	Max. total weight
	[mm]	[bar]	[mm]	[mm]		[mm]	[mm]	[mm]	[mbar/10 K]		[mm]	[kg]
PB	DN 25	PN 40	26.2	58	Rd 52 x 1/6	126	140	76	+16.03	+5.17	271	3.0
PH	DN 40	PN 40	38	78	Rd 65 x 1/6	126	140	86	+5.4	+1.76	281	4.4
PL	DN 50	PN 40	50.7	88	Rd 78 x 1/6	100	114	91	+2.21	+0.88	286	3.8

Process connections PMP48 (with metallic measuring diaphragm)

Note!

- The following tables contain information on the temperature coefficients "T_K Process" and "T_K Ambient". The values given are typical values. These temperature coefficients apply to silicone oil and the membrane material AISI 316L/1.4435. For other filling oils, these temperature coefficients must be multiplied by the T_K correction factor of the corresponding filling oil. For the T_K correction factors, see Page 53, "Diaphragm seal filling oils" section.
- The following drawings are schematic drawings. This means that the dimensions of a diaphragm seal supplied can deviate from the dimensions indicated in this document.
- The tables and drawings always give the maximum installation height for the device version, i.e. this installation height applies to a device with an aluminum housing and a high cover and without any capillaries. The installation heights for devices with a stainless steel housing and a high cover are approx. 5 mm less.
- The tables always give the maximum total weight for the device version, i.e. this total weight applies to a device with an aluminum housing and a high cover. Devices with a stainless steel housing weigh approx. 300 g less.

Threaded connection, flush-mounted diaphragm

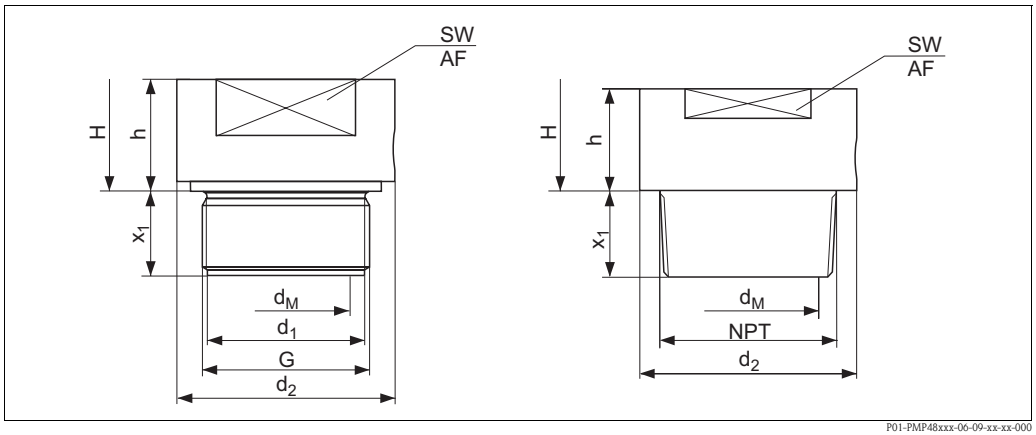

Process connections PMP48, left: thread ISO 228, right: thread ANSI, material AISI 316L/1.4435

Version	Thread	Nominal pressure PN	Diameter d_1 [mm]	Diameter d_2 [mm]	Screw-in length x_1 [mm]	Across flats SW/AF	Height h [mm]	Max. diaphragm diameter d_M [mm]	T_K Ambient [mbar/10 K]	T_K Process [mbar/10 K]	Max. installation height H [mm]	Max. total weight [kg]
AF	G 1 A	400	30	39	21	32	19	30	+16.03	+5.17	199	1.6
AG[1]	G 1 1/2 A	400	43	55	30	41	20	42	+5.4	+1.76	200	2.1
AR	G 2	400	56	68	30	60	20	50	+1.76	+0.56	200	3.1
BF	1 MNPT	400	–	48	28	41	37	24	+15.66	+4.21	217	1.8
BG	1 1/2 MNPT	400	–	50	30	41	20	36	+8.14	+2.59	200	2.1
BR	2 MNPT	400	–	78	30	65	35	38	+5.4	+2.59	235	3.0

1) Endress+Hauser also offers welding necks for this Process connection. → See Page 28.

Separator ISO 228 G 1/2 A and ANSI 1/2 MNPT

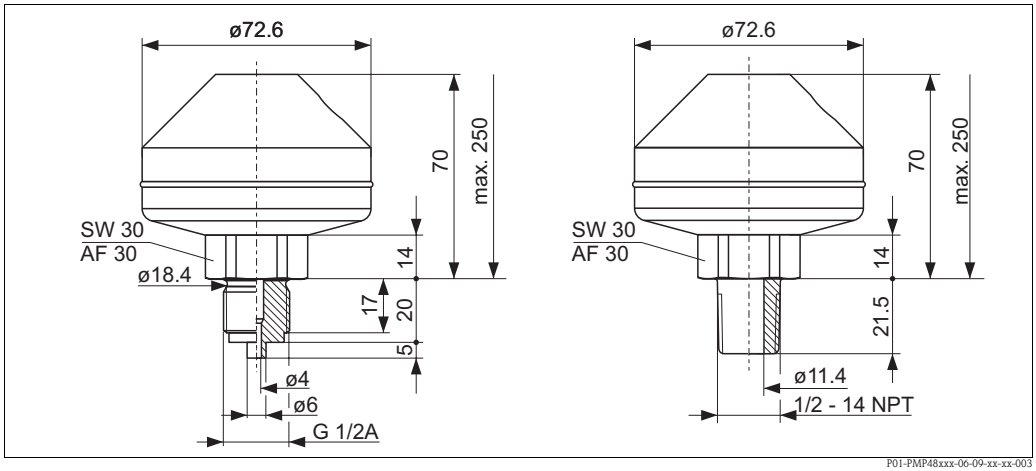

Process connection PMP48, welded, for sensors with a nominal pressure ≤ 40 bar, material AISI 316L/1.4435

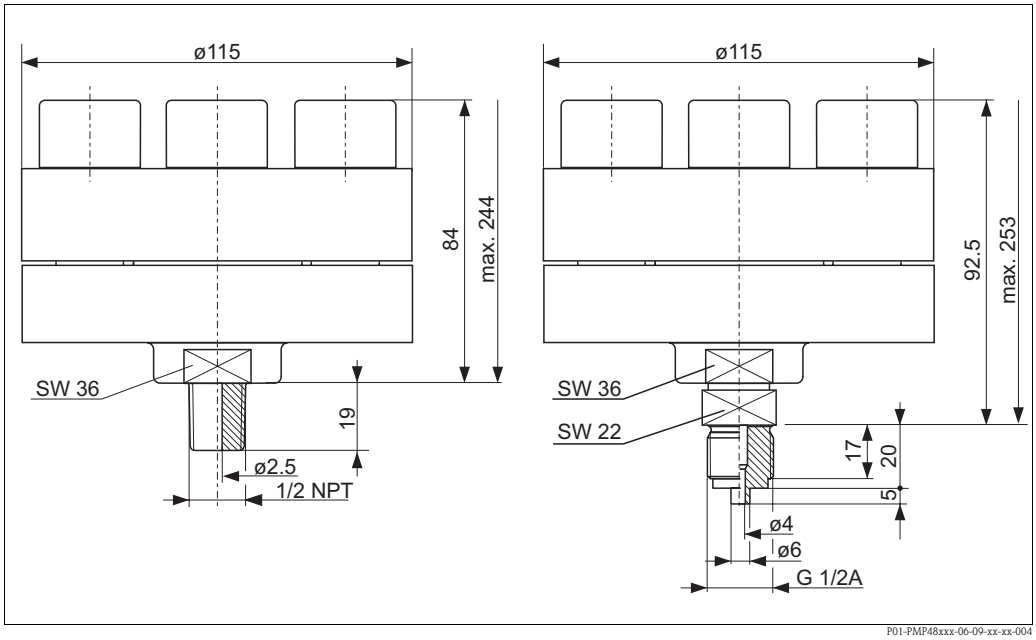

Process connection PMP48, threaded, for sensors with a nominal pressure > 40 bar, material AISI 316L/1.4435

Version	Description	Nominal pressure	T_K Ambient	T_K Process	Max. total weight
			[mbar/10 K]		[kg]
CA	ISO 228 G 1/2 A	PN 160	+0.9	+0.3	2.7
DA	ANSI 1/2 MNPT	PN 160	+0.9	+0.3	6.0
CA	ISO 228 G 1/2 B	PN 400	+0.9	+0.3	6.0
DA	ANSI 1/2 MNPT	PN 400	+0.9	+0.3	2.7

EN/DIN flanges, connection dimensions as per EN 1092-1/DIN 2527 and DIN 2501-1

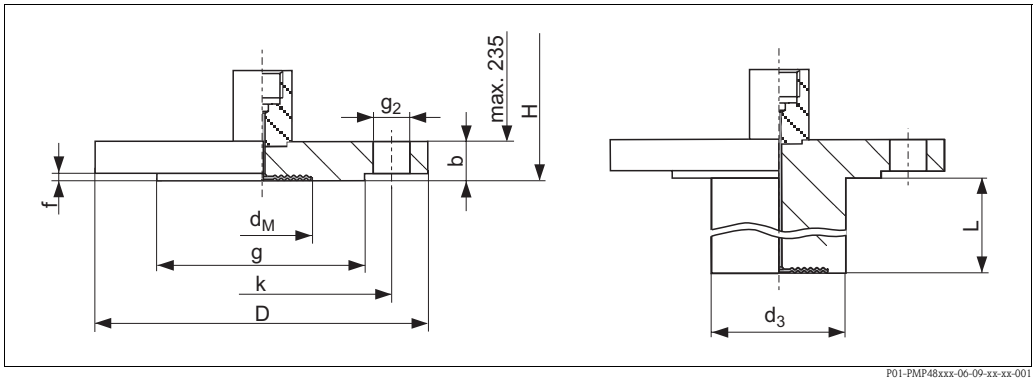

Process connection PMP48, EN/DIN flange with flush-mounted diaphragm, material AISI 316L/1.4435

H Max. installation height = 235 mm + flange thickness b (→ see Table)

	Flanges							Boltholes			Diaphragm seal			
Version	**Nominal diameter**	**Nominal pressure**	**Shape** [1]	**Diameter**	**Thickness**	**Raised face**		**Quantity**	**Diameter**	**Hole circle**	**Max. diaphragm diameter**	**T_K Ambient**	**T_K Process**	**Max. total weight**
				D	**b**	**g**	**f**		**g_2**	**k**				
				[mm]	[mm]	[mm]	[mm]		[mm]	[mm]	[mm]	[mbar/10 K]		[kg]
EB	DN 25	PN 10-40	B1 (D)	115	18	66	3	4	14	85	32	+16.03	+5.17	2.1
EC	DN 25	PN 63-160	E	140	24	68	2	4	18	100	28	+16.03	+5.17	2.5
ED	DN 25	PN 250	E	150	28	68	2	4	22	105	28	+16.03	+5.17	3.7
EF	DN 25	PN 400	E	180	38	68	2	4	26	130	28	+16.03	+5.17	7.0
EK	DN 50	PN 10-40	B1 (D)	165	20	102	3	4	18	125	59	+2.21	+1.15	3.0
EM	DN 50	PN 63	B2 (E)	180	26	102	3	4	22	135	59	+2.21	+1.15	4.6
EN	DN 50	PN 100-160	E	195	30	102	3	4	26	145	59	+2.21	+1.15	6.2
EP	DN 50	PN 250	E	200	38	102	3	8	26	150	59	+2.21	+1.15	7.7
ER	DN 50	PN 400	E	235	52	102	3	8	30	180	59	+2.21	+1.15	14.7
EU	DN 80	PN 10-40	B1 (D)	200	24	138	3.5	8	18	160	89	+0.19	+0.11	5.3
FK [2]	DN 50	PN 10-40	B1 (D)	165	20	102	3	4	18	125	47	+3.45	+1.67	[2]
GK [2]														
JK [2]														
FU [2]	DN 80	PN 10-40	B1 (D)	200	24	138	3.5	4	18	160	72	+0.19	+0.7	[2]
GU [2]														
JU [2]														

1) Designation as per DIN 2527 in brackets

2) Alternatively with 50 mm, 100 mm and 200 mm extended diaphragm seal, for extended diaphragm seal diameter and weight, see the following table

EN/DIN flanges, connection dimensions as per EN 1092-1/DIN 2527 and DIN 2501 (additional technical data)

Version	Nominal diameter	Nominal pressure	Extension length L [mm]	Extension diameter d_3 [mm]	Max. total weight [kg]
FK	DN 50	PN 10-40	50	48.3	4.4
GK	DN 50	PN 10-40	100	48.3	5.0
JK	DN 50	PN 10-40	200	48.3	5.6
FU	DN 80	PN 10-40	50	76	7.4
GU	DN 80	PN 10-40	100	76	7.9
JU	DN 80	PN 10-40	200	76	9.0

JIS flanges, connection dimensions as per B 2220, raised face RF

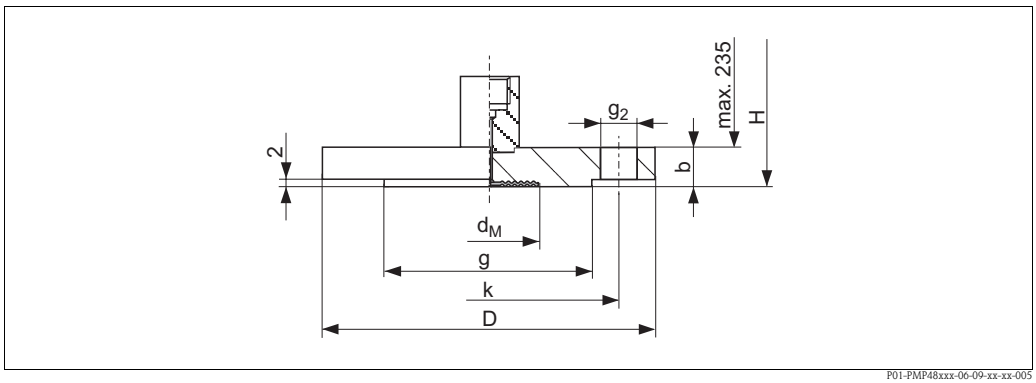

Process connection PMP48, JIS flange, material AISI 316L/1.4435

H Max. installation height = 235 mm + flange thickness b (→ see Table)

	Flange						Boltholes			Diaphragm seal			
Version	Nominal diameter	Nominal pressure	Diameter D [mm]	Thickness b [mm]	Raised face diameter g [mm]	Raised face height f [mm]	Quantity	Diameter g_2 [mm]	Hole circle k [mm]	Max. diaphragm diameter d_M [mm]	T_K Ambient [mbar/10 K]	T_K Process [mbar/10 K]	Max. total weight [kg]
RB	25 A	10 K	125	14	67	1	4	19	90	32	+16.03	+5.17	2.7
RJ	50 A	10 K	155	16	96	2	4	19	120	59	+2.21	+1.15	2.5
RU	80 A	10 K	185	18	127	2	8	19	150	89	+0.19	+0.11	5.5

ANSI flanges B 16.5 RF

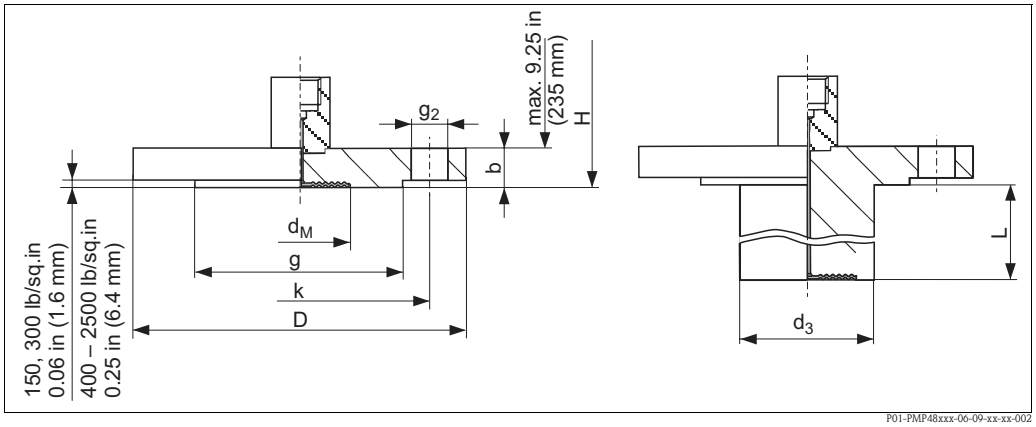

Process connection PMP48, ANSI flange B 16.5 RF with and without extended diaphragm seal

H Max. installation height = 235 mm + flange thickness b (→ see Table)

	Flange						Boltholes			Diaphragm seal			
Version	**Material**[1]	**Nominal diameter** [in]	**Class** [lb./sq.in]	**Diameter D** [in] *[mm]*	**Thickness b** [in] *[mm]*	**Raised face g** [in] *[mm]*	**Quantity**	**Diameter g_2** [in] *[mm]*	**Hole circle k** [in] *[mm]*	**Max. diaphragm diameter** [in] *[mm]*	**T_K Ambient** [mbar/10 K]	**T_K Process** [mbar/10 K]	**Max. total weight** [kg]
KB	AISI 316/ 316L[1]	1	150	4.25 *108*	0.56 *14.2*	2 *50.8*	4	0.62 *15.7*	3.12 *79.2*	1.26 *32*	+16.03	+5.17	2.4
KC	AISI 316/ 316L1	1	300	4.88 *124*	0.69 *17.5*	2 *50.8*	4	0.75 *19.1*	3.5 *88.9*	1.26 *32*	+16.03	+5.17	2.5
KD	AISI 316/ 316L1	1	400/ 600	4.88 *124*	0.69 *17.5*	2 *50.8*	4	0.75 *19.1*	3.5 *88.9*	1.26 *32*	+16.03	+5.17	2.6
KE	AISI 316/ 316L1	1	900/ 1500	5.88 *149.4*	1.12 *28.4*	2 *50.8*	4	1 *25.4*	4 *101.6*	1.26 *32*	+16.03	+5.17	5.0
KF	AISI 316/ 316L1	1	2500	6.25 *158.8*	1.38 *35.1*	2 *50.8*	4	1 *25.4*	4.25 *108*	1.26 *32*	+16.03	+5.17	5.8
KJ	AISI 316/ 316L1	2	150	6 *152.4*	0.75 *19.1*	3.62 *91.9*	4	0.75 *19.1*	4.75 *120.7*	2.32 *59*	+2.21	+1.15	3.4
KK	AISI 316/ 316L1	2	300	6.5 *165.1*	0.88 *22.4*	3.62 *91.9*	8	0.75 *19.1*	5 *127*	2.32 *59*	+2.21	+1.15	4.6
KL	AISI 316/ 316L1	2	400/ 600	6.5 *165.1*	1 *25.4*	3.62 *91.9*	8	0.75 *19.1*	5 *127*	2.32 *59*	+2.21	+1.15	5.3
KM	AISI 316/ 316L1	2	900/ 1500	8.5 *215.9*	1.5 *38.1*	3.62 *91.9*	8	1 *25.4*	6.5 *165.1*	2.32 *59*	+2.21	+1.15	11.5
KN	AISI 316/ 316L1	2	2500	9.25 *235*	2 *50.8*	3.62 *91.9*	8	1.12 *28.4*	6.75 *171.5*	2.32 *59*	+2.21	+1.15	17.0
KU	AISI 316/ 316L1	3	150	7.5 *190.5*	0.94 *23.9*	5 *127*	4	0.75 *19.1*	6 *152.4*	3.50 *89*	+0.19	+0.11	6.3
KV	AISI 316/ 316L1	3	300	8.25 *209.5*	1.12 *28.4*	5 *127*	8	0.75 *19.1*	6 *152.4*	3.50 *89*	+0.19	+0.11	8.2
KW	AISI 316/ 316L1	4	150	9 *228.6*	0.94 *23.9*	6.19 *157.2*	8	0.75 *19.1*	7.5 *190.5*	3.50 *89*	+0.19	+0.11	8.4
KX	AISI 316/ 316L1	4	300	10 *254*	1.25 *31.8*	6.19 *157.2*	8	0.88 *22.4*	7.88 *200.2*	3.50 *89*	+0.19	+0.11	12.9

	Flange						Boltholes			Diaphragm seal			
Version	**Material**	**Nominal diameter** [in]	**Class** [lb./sq.in]	**Diameter D** [in] *[mm]*	**Thickness b** [in] *[mm]*	**Raised face g** [in] *[mm]*	**Quantity**	**Diameter g_2** [in] *[mm]*	**Hole circle k** [in] *[mm]*	**Max. diaphragm diameter** [in] *[mm]*	**T_K Ambient** [mbar/10 K]	**T_K Process** [mbar/10 K]	**Total weight** [kg]
LJ[2]	AISI 316/ 316L [1]	2	150	6 *152.4*	0.75 *19.1*	3.62 *91.9*	4	0.75 *19.1*	4.75 *120.7*	1.85 *47*	+3.45	+1.67	[2]
MJ2													
NJ[2]													
LU2	AISI 316/ 316L[1]	3	150	7.5 *190.5*	0.94 *23.9*	5 *127*	4	0.75 *19.1*	6 *152.4*	2.83 *72*	+0.19	+0.7	[2]
MU2													
NU2													
LW2	AISI 316/ 316L[1]	4	150	9 *228.6*	0.94 *23.9*	6.19 *157.2*	8	0.75 *19.1*	7.5 *190.5*	3.50 *89*	+0.19	+0.11	[2]
MW2													
NW2													

1) Combination of AISI 316 for required pressure resistance and AISI 316L/14435 for required chemical resistance (dual rated).

2) Alternatively with 2", 4" and 6" extended diaphragm seal, for extended diaphragm seal diameter and weight, see the following table

ANSI flanges B 16.5 RF (additional technical data)

Version	**Nominal diameter** [in]	**Class** [lb./sq.in]	**Extension length L** [in] *[(mm)]*	**Extension diameter d_3** [in] *[(mm)]*	**Max. total weight** [kg]
LJ	2	150	2 *(50.8)*	1.9 *(48.3)*	4.2
MJ			4 *(101.6)*		4.6
NJ			6 *(152.4)*		5.1
LU	3	150	2 *(50.8)*	2.99 *(75.9)*	7.2
MU			4 *(101.6)*		7.8
NU			6 *(152.4)*		8.3
LW	4	150	2 *(50.8)*	3.7 *(94)*	9.8
MW			4 *(101.6)*		11.1
NW			6 *(152.4)*		12.4

Weight

- PMC41
  - Stainless steel housing with a high cover: approx. 1.4 kg
  - Aluminum housing with a high cover: approx. 1.6 kg
- PMC45
  - Stainless steel housing with a high cover, threaded connection or hygienic connection: approx. 1.8 kg
  - Aluminum housing with a high cover, threaded connection or hygienic connection: approx. 2.1 kg
  - → For devices with a flange, see Page 31 ff.
- PMP41
  - Stainless steel housing with a high cover: approx. 0.9 kg
  - Aluminum housing with a high cover: approx. 1.2 kg
- PMP45
  - Stainless steel housing with a high cover: approx. 1.5 kg
  - Aluminum housing with a high cover: approx. 1.8 kg
- PMP46
  - → See Page 39 ff, "Process connections PMP46".
- PMP48
  - → See Page 45 ff, "Process connections PMP48".

Material

- Housing:
  - Stainless steel: AISI 316L (1.4404) with surface roughness ≤ 0,8 µm
  - Die-cast aluminum with powder protective coating on polyester base
- Process diaphragm:
  - PMC41 and PMC45: Ceraphire®: Al_2O_3 aluminum oxide ceramic (FDA 21CFR186.1256, USP Class VI), ultrapure 99.9%
    (→ See also www.endress.com/ceraphire)
- O-ring for cover sealing:
  - Stainless steel housing: silicone covered in Teflon
  - Aluminum housing: NBR
- Nameplates:
  - Stainless steel housing: lasered onto the housing
  - Aluminum housing: AISI 304 (1.4301)
- Securing accessories: mounting bracket for pipe and wall mounting AISI 304 (1.4301)
- Capillary: AISI 316 Ti (1.4571)
- Protective hose for capillary: AISI 304 (1.4301)

→ For seals, see Page 23, "Temperature operating range, seals" section.
→ For process connections, process membranes and filling oils, see ordering information, Page 60 ff.

Note!
No animal fats are used in the production of Cerabar M.

Planning instructions for diaphragm seal systems

Applications

Diaphragm seal systems should be used if the process media and the device should be separated. Diaphragm seal systems offer clear advantages in the following instances:
- In the event of high process temperatures (→ see also Page 22, "Process temperature limits" section.)
- For aggressive media
- If good and rapid measuring point cleaning is necessary
- If the measuring point is exposed to vibrations
- For mounting locations that are difficult to access
- For very humid mounting locations

Planning instructions

Note!
The correlations between the individual diaphragm seal components are presented in the following section. For further information and comprehensive diaphragm seal system designs, please see your local Endress+Hauser Sales Center.

Diaphragm seal

The diaphragm seal determines the application range of the system by
- The diaphragm diameter
- The diaphragms: stiffness and material
- The design (oil volume).

Diaphragm diameter

The larger the diaphragm diameter (less stiffness), the smaller the temperature effect on the measurement result.
Note: To keep the temperature effect in practice-oriented limits, you should select diaphragm seals with a nominal diameter ≥ DN 80, in as far as the process connection allows for it.

Diaphragm stiffness

The stiffness is dependent on the diaphragm diameter, the material, any available coating and on the diaphragm thickness and shape. The diaphragm thickness and the shape are defined constructively. The stiffness of a diaphragm seal membrane influences the temperature operating range and the measuring error caused by temperature effects.

Capillary

Capillaries with an internal diameter of 1 mm are used as standard.
The capillary tube influences the T_K zero point, the ambient temperature operating range and the response time of a diaphragm seal system as a result of its length and internal diameter.
→ See also Page 53 ff, "Influence of the temperature on the zero point" and "Ambient temperature range" sections.
→ Observe the installation instructions regarding capillary tubes. See Page 58, "Installation instructions" section.

Filling oil

When selecting the filling oil, fluid and ambient temperature as well as the operating pressure are of crucial importance. Observe the temperatures and pressures during commissioning and cleaning. A further selection criterion is the compatibility of the filling oil with the requirements of the process medium. For this reason, only filling oils that are harmless to health are used in the food industry, such as vegetable oil.
→ See also the following section "Diaphragm seal filling oils".
The filling oil used influences the T_K zero point, the temperature operating range of a diaphragm seal system and the response time. → See also Page 53 ff, "Influence of the temperature on the zero point" section.

Pressure transmitter

The pressure transmitter influences the temperature operating range, the T_K zero point and the response time as a result of its volume change. The volume change is the volume that has to be shifted to pass through the complete measuring range.
Pressure transmitters from Endress+Hauser are optimized with regard to minimum volume change.

Diaphragm seal filling oils

Version [1]	Filling oil	Permitted temperature range at 0.05 bar ≤ p_{abs} ≤ 1 bar	Permitted temperature range at p_{abs} ≥ 1 bar	Density [g/cm³]	Viscosity [cSt at 25°C/ 77°F]	Expansion coefficient [1/K]	T_K correction factor	Notes
A, J or O	Silicone oil	–40 to +180°C (–40 to +356°F)	–40 to +250°C (–40 to +482°F)	0.96	100	0.00096	1	Suitable for foods
G, H or K	High-temperature oil	–10 to +200°C (+14 to +392°F)	–10 to +350°C (+14 to +662°F)	1.07	37	0.0007	0.72	High temperatures
N	Inert oil	–40 to +80°C (–40 to +176°F)	–40 to +175°C (-40 to +347°F)	1.87	27	0.000876	0.91	Oil for ultrapure gas and oxygen applications
D, F, L [2] or P	Vegetable oil	–10 to +120°C (+14 to +248°F)	–10 to +200°C (+14 to +392°F)	0.94	9.5	0.00101	1.05	Suitable for foods FDA 21 CFR 172.856
E	Glycerine	—	+15 to +200°C (+59 to +392°F)	1.26	1118	0.000615	0.64	Suitable for foods

1) Version for feature 80 in the order code

2) Version "L" only for PMP46

Influence of the temperature on the zero point

A temperature change results in a volume change of the filling oil. The volume change is dependent on the coefficient of thermal expansion of the filling oil at calibration temperature (constant in the range: +21 to +33°C (+69.8 to 91.4°F)). → See also Page 53, "Diaphragm seal filling oils" section.
For example, the filling oil expands in the event of a temperature increase. The additional volume presses against the diaphragm seal membrane. The stiffer a diaphragm is, the greater its return force, which counteracts a volume change and acts on the measuring cell together with the operating pressure, thus shifting the zero point. For the temperature coefficients "T_K Process" and "T_K Ambient (for devices without capillaries)" see Page 39 ff, "Process connections PMP46 and PMP48" section.

The following diagrams illustrate the temperature coefficient "T_K Ambient" dependent on the capillary length. The following situation is illustrated: capillary and transmitter temperature (ambient temperature) change, the process temperature corresponds to the calibration temperature.
The temperature coefficients obtained from the diagrams apply to silicone oil and the membrane material AISI 316L/1.4435. For other filling oils, these temperature coefficients must be multiplied by the T_K correction factor of the corresponding filling oil. For the T_K correction factors, see this Page, "Diaphragm seal filling oils" section.
With regard to the temperature coefficient "T_K Ambient", devices with 100 mm temperature isolation behave like devices with the same process connection with 1 m capillary, i.e.

- For devices with high-temperature oil (version "G", feature 80 "Transmitter mounting; Fill fluid" → see Page 70) the temperature coefficient "T_K Ambient" must be taken from the following diagrams for PMP46 for the corresponding process connection for 1 m capillary and then multiplied by the T_K correction factor for high-temperature oil (0.72).
- For devices with vegetable oil (version "L", feature 80 "Transmitter mounting; Fill fluid" → see Page 70) the temperature coefficient "T_K Ambient" must be taken from the following diagrams for PMP46 for the corresponding process connection for 1 m capillary and then multiplied by the T_K correction factor for vegetable oil (1.05).

Diagrams for diaphragm seal PMP46 with sample calculation

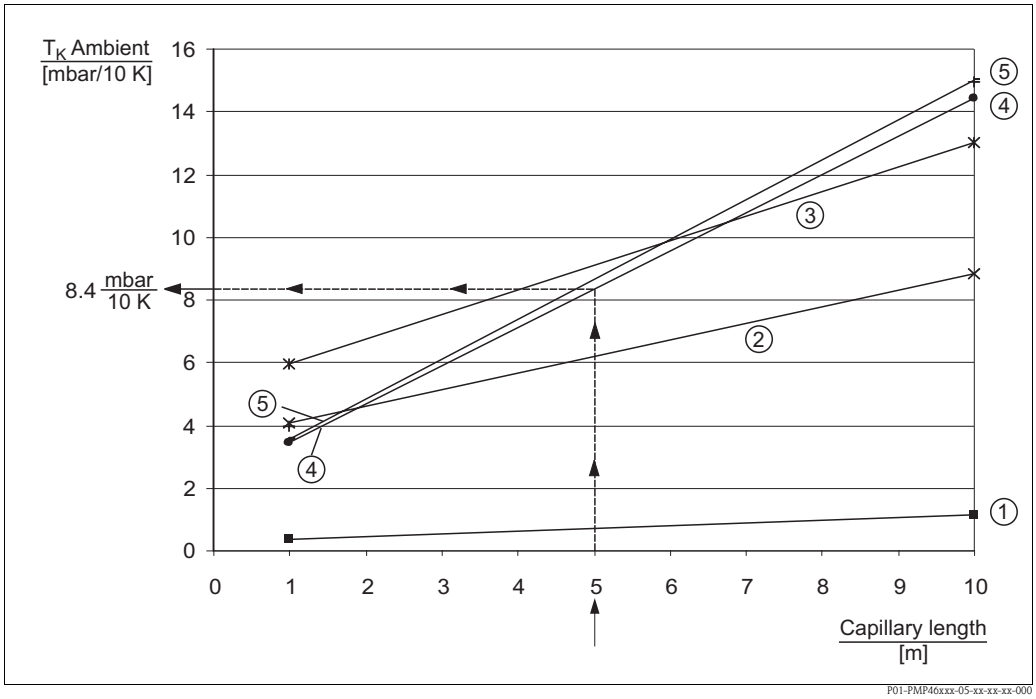

Diagram T_K Ambient as a function of the capillary length for PMP46

Example for:
– Diaphragm seal version "AL, DIN 11851 DN 50 PN 25, AISI 316L/1.4435"
– Capillary length: 5 m
– Ambient temperature capillary/transmitter: 45 °C
– Filling oil: silicone oil

1. Select characteristic type for diaphragm seal version "AL" in accordance with the following table.
   Result: characteristic type 4
2. Determine value for T_K Ambient from the diagram.
   Result: 8.4 mbar/10 K
3. $T_{Ambient} - T_{calibration}$ = 45 °C – 25 °C = 20 °C ⇒ 8.4 mbar/10 K x 20 K = 16.8 mbar

Result: In this example, the zero point is shifted 16.8 mbar.

Note!
The influence of temperature on the zero point can be corrected by position adjustment.

Characteristic type	Version[1]	Diaphragm seal
1	DU	Tri-Clamp, ISO 2852 DN 76.1 (3"), AISI 316L/1.4435
2	SL	Pipe diaphragm seal Tri-Clamp, ISO 2852 DN 51 (2"), AISI 316L/1.4435
3	SG	Pipe diaphragm seal Tri-Clamp, ISO 2852 DN 38 (1 1/2"), AISI 316L/1.4435
4	AL	DIN 11851 DN 50 PN 25, AISI 316L/1.4435
	PL	Pipe diaphragm seal DIN 11581 DN 50 PN 40, AISI 316L/1.4435
5	LL	Varivent type N for pipes DN 40 – DN 162, PN 40, AISI 316L/1.4435
	KL	DRD 65 mm PN 25, AISI 316L/1.4435

1) Version for feature 70 "Process connection" in the order code

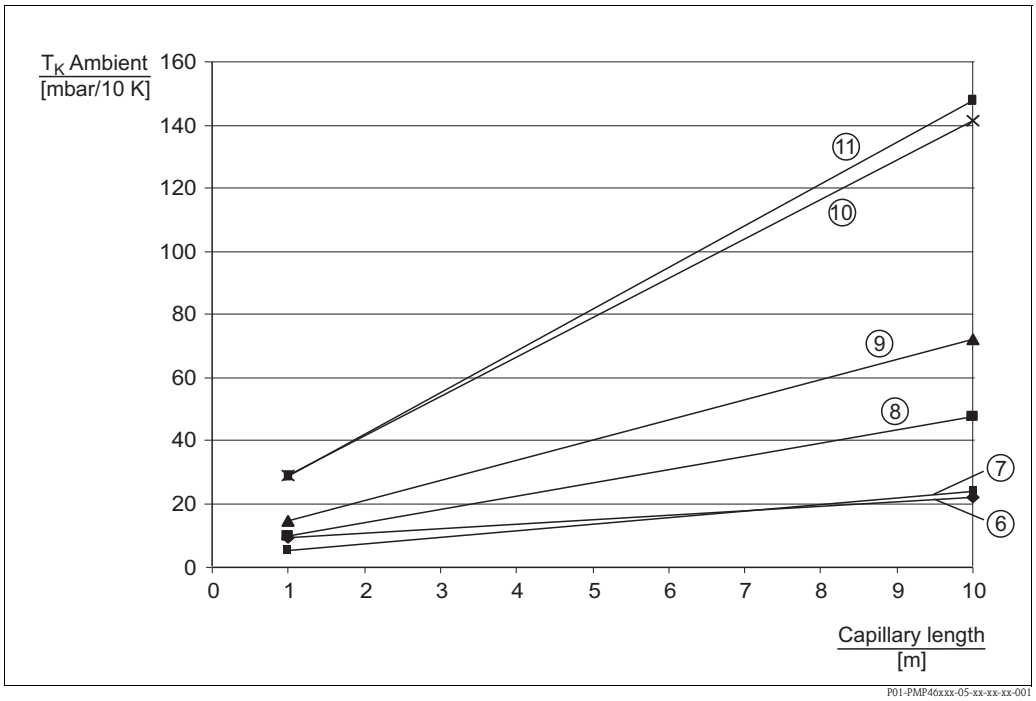

Diagram TK Ambient as a function of the capillary length for PMP46

Characteristic type	Version[1]	Diaphragm seal
6	SB	Pipe diaphragm seal Tri-Clamp, ISO 2852 DN 25 (1"), AISI 316L/1.4435
	LB	Varivent type F for pipes DN 25 – DN 32 PN40, AISI 316L/1.4435
7	DL	Tri-Clamp, ISO 2852 DN 51 (2"), DIN 32676 DN 50, AISI 316L/1.4435
8	AH	DIN 11851 DN 40, AISI 316L/1.4435
8	PH	Pipe diaphragm seal DIN 11851 DN 40 PN 40, AISI 316L/1.4435
8	EL	SMS 2" PN 25, AISI 316L/1.4435
8	FL	APV-RJT 2" PN 40, AISI316L/1.4435
8	GL	APV-ISS 2" PN 40, AISI316L/1.4435
9	AG	DIN 11851 DN 32 PN 40, AISI 316L/1.4435
9	EG	SMS 1 1/2" PN 25, AISI 316L/1.4435
9	FG	APV-RJT 1 1/2" PN 40, AISI 316L/1.4435
9	GG	APV-ISS 1 1/2" PN 40, AISI 316L/1.4435
9	DG	Tri-Clamp, ISO 2852 DN 38 (1 1/2"), DIN 32676 DN 40, AISI 316L/1.4435
10	PB	Pipe diaphragm seal DIN 11851 DN 25 PN 40, AISI 316L/1.4435
11	DF	Tri-Clamp, ISO 2852 (1"), DIN 32676 DN 25, AISI 316L/1.435

1) Version for feature 70 "Process connections" in the order code

Diagrams for diaphragm seal PMP48

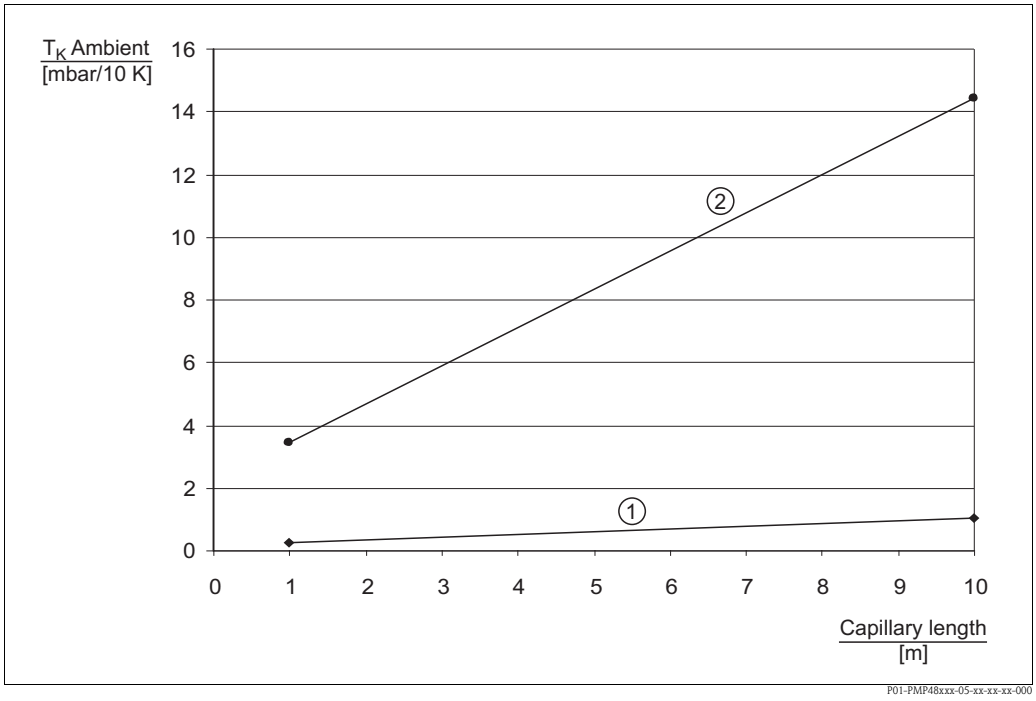

Diagram T_K Ambient as a function of the capillary length for PMP48

Characte-ristic type	Version[1]	Diaphragm seal
1	EU	EN/DIN flange DN 80 PN 10-40 B1, AISI 316L/1.4435
	RU	JIS flange 10K 80A RF, AISI 316L/1.4435
	FU	EN flange DN 80 PN 10-40 B1, extended diaphragm seal: 50 mm, AISI 316L/1.4435
	GU	EN flange DN 80 PN 10-40 B1, extended diaphragm seal: 100 mm, AISI 316L/1.4435
	JU	EN flange DN 80 PN 10-40 B1, extended diaphragm seal: 200 mm, AISI 316L/1.4435
	KU	ANSI flange 3" 150 lbs RF, AISI 316/316L (1.4435)
	KV	ANSI flange 3" 300 lbs RF, AISI 316/316L (1.4435)
	LU	ANSI flange 3" 150 lbs RF, extended diaphragm seal: 2", AISI 316/316L (1.4435)
	MU	ANSI flange 3" 150 lbs RF, extended diaphragm seal: 4", AISI 316/316L (1.4435)
	NU	ANSI flange 3" 150 lbs RF, extended diaphragm seal: 6", AISI 316/316L (1.4435)
	KW	ANSI flange 4" 150 lbs RF, AISI 316/316L (1.4435)
	KX	ANSI flange 4" 300 lbs RF, AISI 316/316L (1.4435)
	LW	ANSI flange 4" 150 lbs RF, extended diaphragm seal: 2", AISI 316L/ 1.4435
	MW	ANSI flange 4" 150 lbs RF, extended diaphragm seal: 4", AISI 316L/ 1.4435
	NW	ANSI flange 4" 150 lbs RF, extended diaphragm seal: 6", AISI 316L/ 1.4435
2	EK	EN/DIN flange DN 50 PN 10-40 B1, AISI 316L/1.4435
	EM	EN/DIN flange DN 50 PN 63 B2, AISI 316L/1.4435
	EN	EN/DIN flange DN 50 PN 100/160 E, AISI 316L/1.4435
	EP	EN/DIN flange DN 50 PN 250 E, AISI 316L/1.4435
	ER	EN/DIN flange DN 50 PN 400 E, AISI 316L/1.4435
	KJ	ANSI flange 2" 150 lbs RF, AISI 316/316L (1.4435)
	KK	ANSI flange 2" 300 lbs RF, AISI 316/316L (1.4435)
	KL	ANSI flange 2" 400/600 lbs RF, AISI 316/316L (1.4435)
	KM	ANSI flange 2" 900/1500 lbs RF, AISI 316/316L (1.4435)
	KN	ANSI flange 2" 2500 lbs RF, AISI 316/316L (1.4435)
	RJ	JIS flange 10K 50A RF, AISI 316L/1.4435

1) Version for feature 70 "Process connection" in the order code

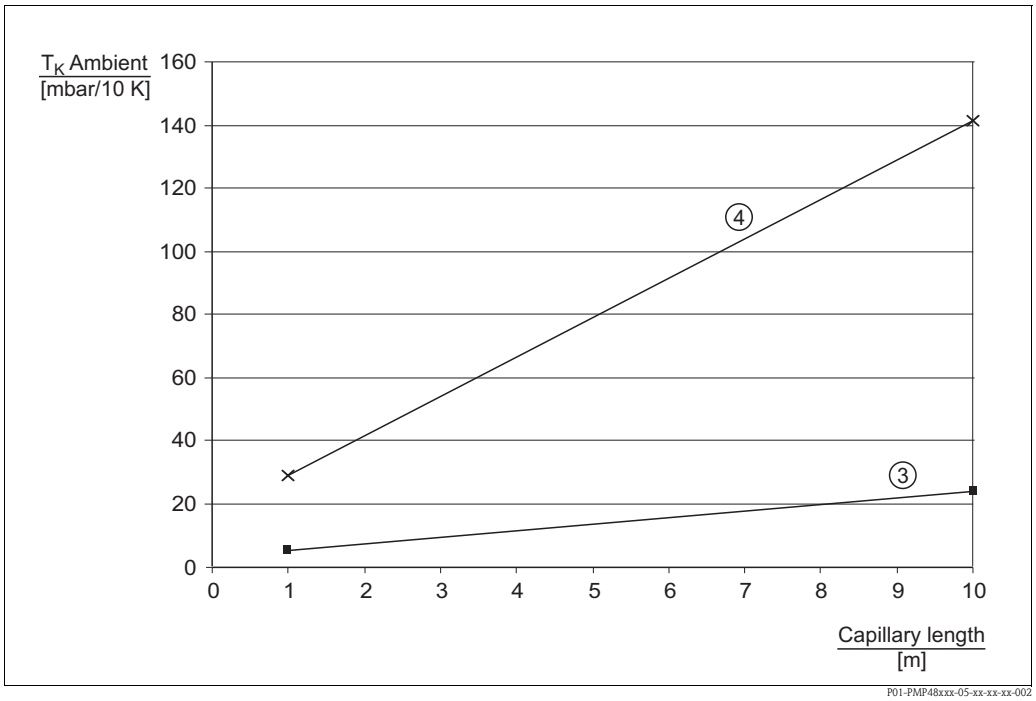

Diagram T_K Ambient as a function of the capillary length for PMP48

Characte-ristic type	Version[1]	Diaphragm seal
3	FK	EN flange DN 50 PN10-40 B1, extended diaphragm seal: 50 mm, AISI 316L/1.4435
	GK	EN flange DN 50 PN10-40 B1, extended diaphragm seal: 100 mm, AISI 316L/1.4435
	JK	EN flange DN 50 PN10-40 B1, extended diaphragm seal: 200 mm, AISI 316L/1.4435
	LJ	ANSI flange 2" 150 lbs, extended diaphragm seal: 2", AISI 316L/1.4435
	MJ	ANSI flange 2" 150 lbs, extended diaphragm seal: 4", AISI 316L/1.4435
	NJ	ANSI flange 2" 150 lbs, extended diaphragm seal: 6", AISI 316L/1.4435
4	EB	EN/DIN flange DN 25 PN 10-40 B1, AISI 316L/1.4435
	EC	EN/DIN flange DN 25 PN 64-160 E, AISI 316L/1.4435
	ED	EN/DIN flange DN 25 PN 250 E, AISI 316L/1.4435
	EF	EN/DIN flange DN 25 PN 400 E, AISI 316L/1.4435
	KB	ANSI flange 1" 150 lbs RF, AISI 316/316L (1.4435)
	KC	ANSI flange 1" 300 lbs RF, AISI 316/316L (1.4435)
	KD	ANSI flange 1" 400/600 lbs RF, AISI 316/316L (1.4435)
	KE	ANSI flange 1" 900/1500 lbs RF, AISI 316/316L (1.4435)
	KF	ANSI flange 1" 2500 lbs RF, AISI 316/316L (1.4435)
	RB	JIS flange 10K 25A RF, AISI 316L/1.4435

1) Version for feature 70 "Process connections" in the order code

Minimize temperature effect by	Comment
Shorter capillary	–
Diaphragm seal with larger diaphragm diameter	–
Filling oil with a smaller coefficient of thermal expansion	– Observe compatibility of the filling oil with the fluid. – Observe the filling oil operating limits.

Ambient temperature range

The filling oil, capillary length, capillary internal diameter and the diaphragm diameter of the diaphragm seal have an influence on the ambient temperature operating range.

Optimize ambient temperature operating range by	Comments
Shorter capillaries	–
Filling oil with smaller coefficient of thermal expansion	– Observe compatibility of the filling oil with the fluid. – Observe the filling oil operating limits.
Diaphragm seal with larger diaphragm diameter	–

Installation instructions

Instructions for diaphragm seal systems

- The diaphragm seal together with the transmitter form a closed, calibrated system, which is filled through ports in the diaphragm seal and in the measurement system of the transmitter. These ports are sealed and must not be opened.
- In the case of devices with diaphragm seals and capillaries, the zero point shift caused by the hydrostatic pressure of the filling liquid column in the capillaries must be taken into account when selecting the measuring cell. If a measuring cell with a small measuring range is selected, the sensor nominal range can be overdriven as a result of position adjustment.
- When using a mounting bracket, sufficient strain relief must be allowed for in order to prevent the capillary bending down (capillary bending radius ≥ 100 mm).

Installation instructions

In order to obtain more precise measurement results and to avoid a defect in the device, mount the capillaries as follows:
- Vibration–free (in order to avoid additional pressure fluctuations)
- Not in the vicinity of heating or cooling lines
- Insulate at colder or warmer ambient temperatures
- With a bending radius of ≥ 100 mm.

Vacuum applications

For applications under vacuum, Endress+Hauser recommends mounting the pressure transmitter below the diaphragm seal. A vacuum load of the diaphragm seal caused by the presence of fill fluid in the capillary prevents is hereby prevented.

When the pressure transmitter is mounted above the diaphragm seal, the maximum height difference H1 in accordance with the following illustration must not be exceeded. The maximum height difference is dependent on the density of the filling oil and the smallest ever pressure that is permitted to occur at the diaphragm seal (empty tank), see the following illustration on the right. Glycerine is not suitable for vacuum applications.

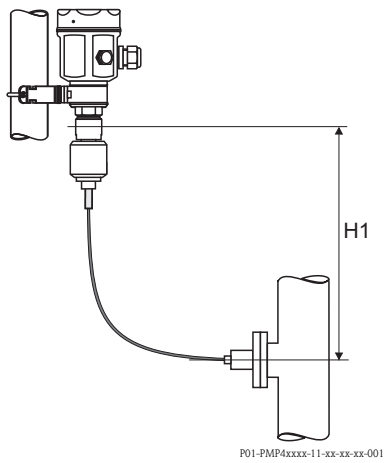

Installation above the diaphragm seal

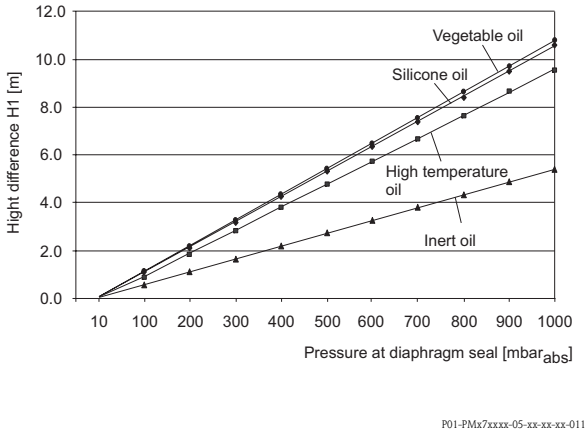

Diagram of maximum installation height above the diaphragm seal for vacuum applications

Certificates and approvals

CE mark	The device meets the legal requirements of the relevant EC directive. Endress+Hauser confirms that the device has been successfully tested by applying the CE mark.
Ex approvals	All explosion protection data are given in separate documentation which is available upon request. The Ex documentation is supplied as standard with all devices approved for use in explosion hazardous areas. →See also Page 74 ff, "Safety Instructions" and "Installation/Control Drawings" sections.
Pressure Equipment Directive (PED)	– This measuring device corresponds to Article 3 (3) of the EC directive 97/23/EC (Pressure Equipment Directive) and has been designed and manufactured according to good engineering practice. – PMP41 with threaded connection, PN > 200: suitable for stable gases in Group 1, Category I – PMP46 with pipe diaphragm seal ≥ 1.5"/PN40 or DN40/PN40: Suitable for stable gases in Group 1, Category II
Functional safety SIL 2/ IEC 61508/IEC 61511-1	The Cerabar M pressure transmitters with 4 to 20 mA HART electronics have been assessed by an independent body according to the standards IEC 61508/IEC 61511-1. These devices can be used for monitoring process pressure up to SIL 2. → For a detailed description of safety functions with Cerabar M, settings and characteristic quantities for functional safety, see the "Functional Safety Manual – Cerabar M SD172P".
Standards and guidelines	DIN EN 60770 (IEC 60770): Transmitters for controlling in systems used in industrial process technology Part 1: Methods for evaluating the operating behavior DIN 16086: Electrical pressure measuring devices, pressure sensors, transmitters, pressure measuring devices Terms, specifications in data sheets EN 61326: Electrical equipment for control technology and laboratory application – EMC requirements EN 61000-4-5: Electromagnetic compatibility (EMC) – Part 4: Testing and measuring processes; Main section 5: Test against surge voltage

Ordering information

PMC41

10	Approval:
R	For non-hazardous areas
G	ATEX II 1/2 G EEx ia IIC T6
F	ATEX II 1 G EEx ia IIC T6
H	ATEX II 2 G EEx ia IIC T6
N	ATEX II 3 G EEx nA II T5
J	ATEX II 1/2 G 1/2 D EEx ia IIC T6
K	ATEX II 1/2 D EEx ia IIC T6
L	ATEX II 1/3 D
C	CSA General Purpose
S	CSA IS, Class I, II, III Division 1, Groups A – G
T	CSA XP, Class II, III, Division 1, Groups E – G (dust Ex), Class I, Division 2, Groups A – D
P	FM IS, Class I, II, III, Division 1, Groups A – G
M	FM DIP, Class II, III Division 1, Groups E – G
V	TIIS IS, Ex ia IIC T6

20	Housing; Electrical connection:
E1	AISI 316L; gland M20, IP 66
C1	AISI 316L; thread NPT 1/2, IP 66
G1	AISI 316L; thread G 1/2, IP 66
H1	AISI 316L; plug Han7D, IP 65
L1	AISI 316L; plug M12, IP 66 (in conjunction with absolute pressure sensors IP 68/NEMA 6P)
K1	AISI 316L; cable 5 m, IP 68 + atmospheric pressure compensation
E2	Aluminum; gland M20, IP 66
C2	Aluminum; thread NPT 1/2, IP 66
G2	Aluminum; thread G 1/2, IP 66
H2	Aluminum; plug Han7D, IP 65
L2	Aluminum; plug M12, IP 66 (in conjunction with absolute pressure sensors IP 68/NEMA 6P)
K2	Aluminum; cable 5 m, IP 68 + atmospheric pressure compensation

30	Sensor range; MWP; OPL:		
	Sensor range	**MWP (maximum working pressure)**	**OPL (over pressure limit)**
	Sensors for gauge pressure		
1C	0 to 100 mbar/10 kPa/1.5 psi g	2.7 bar/270 kPa/40 psi	4 bar/400 kPa/60 psi
1F	0 to 400 mbar/40 kPa/6 psi g	5.3 bar/530 kPa/80 psi	8 bar/800 kPa/120 psi
1H	0 to 1 bar/100 kPa/15 psi g	6.7 bar/670 kPa/100 psi	10 bar/1 MPa/150 psi
1M	0 to 4 bar/400 kPa/60 psi g	16.7 bar/1.67 MPa/250 psi	25 bar/2.5 MPa/375 psi
1P	0 to 10 bar/1 MPa/150 psi g	26.7 bar/2.67 MPa/400 psi	40 bar/4 MPa/600 psi
1S	0 to 40 bar/4 MPa/600 psi g	40 bar/4 MPa/600 psi	60 bar/6 MPa/900 psi
	Sensors for negative gauge pressure		
5C	–100 to 100 mbar/-10 to 10 kPa/ -1.5 to 1.5 psi g	2.7 bar/270 kPa/40 psi	4 bar/400 kPa/60 psi
5F	–400 to 400 mbar/–40 to 40 kPa/–6 to 6 psi g	5.3 bar/530 kPa/80 psi	8 bar/800 kPa/120 psi
5H	–1 to 1 bar/–100 to 100 kPa/–15 to 15 psi g	6.7 bar/670 kPa/100 psi	10 bar/1 MPa/150 psi
5M	–1 to 4 bar/–100 to 400 kPa/–15 to 60 psi g	16.7 bar/1.67 MPa/250 psi	25 bar/2.5 MPa/600 psi
5P	–1 to 10 bar/–100 to 1 MPa/–15 to 150 psi g	26.7 bar/2.67 MPa/400 psi	40 bar/4 MPa/600 psi
	Sensors for absolute pressure		
2F	0 to 400 mbar/40 kPa/6 psi abs.	5.3 bar/530 kPa/40 psi	8 bar/800 kPa/120 psi
2H	0 to 1 bar/100 kPa/15 psi abs.	6.7 bar/670 kPa/80 psi	10 bar/1 MPa/150 psi
2M	0 to 4 bar/400 kPa/60 psi abs.	16.7 bar/1.67 MPa/250 psi	25 bar/2.5 MPa/375 psi
2P	0 to 10 bar/1 MPa/150 psi abs.	26.7 bar/2.67 MPa/400 psi	40 bar/4 MPa/600 psi
2S	0 to 40 bar/4 MPa/600 psi abs.	40 bar/4 MPa/600 psi	60 bar/6 MPa/900 psi

40	Calibration; Unit:
1	0.2% sensor range; mbar/bar
2	0.2% sensor range; kPa/MPa
3	0.2% sensor range; mm/mH_2O
4	0.2% sensor range; inH_2O/ftH_2O
5	0.2% sensor range; kgf/cm2
6	0.2% sensor range; psi
B	0.2% see additional specification
C	0.1% see additional specification
D	DKD certificate; see additional specification

PMC41									Order code

→ For continuation of ordering information of PMC41, see the following page.

PMC41 (continued)

50					**Output; Operation:**					
					A	4 to 20 mA analog; without display				
					C	4 to 20 mA analog; bar graph				
					H	4 to 20 mA HART; without display				
					J	4 to 20 mA HART; 4-digit pressure display + bar graph				
					P	PROFIBUS PA; without display				
					R	PROFIBUS PA; 4-digit pressure display + bar graph				
					W	Without electronics; without display				
60							**Additional option:**			
							1	Basic version		
							2	Mounting bracket, wall/pipe		
							C	EN10204 3.1 (process connection) inspection certificate		
							S	GL (German Lloyd) marine certificate		
70								**Process connection:**		
									Threaded connection	
								1M	Thread ISO228 G1/2, AISI 316L	
								2M	Thread ISO228 G1/2, Alloy C	
								1R	Thread ISO228 G1/2 bore 11 mm, AISI 316L	
								1P	Thread ISO228 G1/2 G1/4 (female), AISI 316L	
								1 A	Thread ANSI 1/2 MNPT bore 11 mm, AISI 316L	
								1N	Thread ANSI 1/2 MNPT FNPT1/4, AISI 316L	
								2N	Thread ANSI 1/2 MNPT 1/4 FNPT, Alloy C	
								1S	Thread JIS B0202 G1/2 (male), AISI 316L	
								1 K	Thread JIS B0203 R1/2 (male), AISI 316L	
								1T	Thread DIN 13 M20x1.5, AISI 316L	
80									**Sensor seal:**	
									1	FKM Viton
									2	NBR
									4	EPDM
									C	Chemraz
									7	Kalrez
									A	FKM Viton, oil + grease free
									6	FKM Viton, oxygen service
PMC41										Complete order code

PMC45

10	Approval:
R	For non-hazardous areas
G	ATEX II 1/2 G EEx ia IIC T6
F	ATEX II 1 G EEx ia IIC T6
H	ATEX II 2 G EEx ia IIC T6
N	ATEX II 3 G EEx nA II T5
C	CSA General Purpose
S	CSA IS, Class I, II, III Division 1, Groups A – D, G + coal dust
P	FM IS, Class I, II, III, Division 1, Groups A – G
V	TIIS IS, Ex ia IIC T6

20	Housing; electrical connection:
E1	AISI 316L; gland M20, IP 66
C1	AISI 316L; thread NPT 1/2, IP 66
G1	AISI 316L; thread G 1/2, IP 66
H1	AISI 316L; plug Han7D, IP 65
L1	AISI 316L; plug M12, IP 66 (in conjunction with absolute pressure sensors IP 68/NEMA 6P)
K1	AISI 316L; cable 5 m, IP 68 + atmospheric pressure compensation
E2	Aluminum; gland M20, IP 66
C2	Aluminum; thread NPT 1/2, IP 66
G2	Aluminum; thread G 1/2, IP 66
H2	Aluminum; plug Han7D, IP 65
L2	Aluminum; plug M12, IP 66 (in conjunction with absolute pressure sensors IP 68/NEMA 6P)
K2	Aluminum; cable 5 m, IP 68 + atmospheric pressure compensation

30	Sensor range; MWP; OPL:		
	Sensor range	**MWP (maximum working pressure)**	**OPL (over pressure limit)**
	Sensors for gauge pressure		
1C	0 to 100 mbar/10 kPa/1.5 psi g	2.7 bar/270 kPa/40 psi	4 bar/400 kPa/60 psi
1F	0 to 400 mbar/40 kPa/6 psi g	5.3 bar/530 kPa/80 psi	8 bar/800 kPa/120 psi
1H	0 to 1 bar/100 kPa/15 psi g	6.7 bar/670 kPa/100 psi	10 bar/1 MPa/150 psi
1M	0 to 4 bar/400 kPa/60 psi g	16.7 bar/1.67 MPa/250 psi	25 bar/2.5 MPa/375 psi
1P	0 to 10 bar/1 MPa/150 psi g	26.7 bar/2.67 MPa/400 psi	40 bar/4 MPa/600 psi
1S	0 to 40 bar/4 MPa/600 psi g	40 bar/4 MPa/600 psi	60 bar/6 MPa/900 psi
	Sensors for negative gauge pressure		
5C	–100 to 100 mbar/-10 to 10 kPa/ -1.5 to 1.5 psi g	2.7 bar/270 kPa/40 psi	4 bar/400 kPa/60 psi
5F	–400 to 400 mbar/–40 to 40 kPa/ –6 to 6 psi g	5.3 bar/530 kPa/80 psi	8 bar/800 kPa/120 psi
5H	–1 to 1 bar/–100 to 100 kPa/–15 to 15 psi g	6.7 bar/670 kPa/100 psi	10 bar/1 MPa/150 psi
5M	–1 to 4 bar/–100 to 400 kPa/–15 to 60 psi g	16.7 bar/1.67 MPa/250 psi	25 bar/2.5 MPa/600 psi
5P	–1 to 10 bar/–100 to 1 MPa/ –15 to 150 psi g	26.7 bar/2.67 MPa/400 psi	40 bar/4 MPa/600 psi
	Sensors for absolute pressure		
2F	0 to 400 mbar/40 kPa/6 psi abs.	5.3 bar/530 kPa/40 psi	8 bar/800 kPa/120 psi
2H	0 to 1 bar/100 kPa/15 psi abs.	6.7 bar/670 kPa/80 psi	10 bar/1 MPa/150 psi
2M	0 to 4 bar/400 kPa/60 psi abs.	16.7 bar/1.67 MPa/250 psi	25 bar/2.5 MPa/375 psi
2P	0 to 10 bar/1 MPa/150 psi abs.	26.7 bar/2.67 MPa/400 psi	40 bar/4 MPa/600 psi
2S	0 to 40 bar/4 MPa/600 psi abs.	40 bar/4 MPa/600 psi	60 bar/6 MPa/900 psi

40	Calibration; Unit:
1	0.2% sensor range; mbar/bar
2	0.2% sensor range; kPa/MPa
3	0.2% sensor range; mm/mH_2O
4	0.2% sensor range; inH_2O/ftH_2O
5	0.2% sensor range; kgf/cm2
6	0.2% sensor range; psi
B	0.2% see additional specification
C	0.1% see additional specification
D	DKD certificate; see additional specification

PMC45									Order code

→ For continuation of ordering information of PMC45, see the following page.

PMC45 (continued)

50	Output; Operation:
A	4 to 20 mA analog; without display
C	4 to 20 mA analog; bar graph
H	4 to 20 mA HART; without display
J	4 to 20 mA HART; 4-digit pressure display + bar graph
P	PROFIBUS PA; without display
R	PROFIBUS PA; 4-digit pressure display + bar graph
W	Without electronics; without display

60	Additional option:
1	Basic version
C	EN10204 3.1 (process connection) inspection certificate
S	GL (German Lloyd) marine certificate

70	Process connection:
	Threaded connection
AG	Thread ISO 228 G 1 1/2 , AISI 316L
AR	Thread ISO 228 G 2, AISI 316L
BF	Thread ANSI 1 1/2 MNPT, AISI 316L
BR	Thread ANSI 2 MNPT, AISI 316L
XK	Thread DIN 13 M44x1.25, AISI 316L
	Clamp connections
DL	Tri-Clamp, ISO 2852 DN 51 (2"), DIN 32676 DN 50, AISI 316L, EHEDG, 3A with HNBR/NBR seal
	Hygienic connections
EG	SMS 1 1/2" PN 25, AISI 316L, 3A with HNBR/EPDM seal
EL	SMS 2" PN 25, AISI 316L, 3A with HNBR/EPDM seal
HL	APV-Inline DN 50 PN 40, AISI 316L, 3A with HNBR/EPDM seal
LB	Varivent F for pipes DN 25 – 32 PN 40, AISI 316L, EHEDG, 3A with HNBR/EPDM seal
LL	Varivent N for pipes DN 40 – 162 PN 40, AISI 316L, EHEDG, 3A with HNBR/EPDM seal
KL	DRD 65 mm PN 25, AISI 316L, EHEDG, 3A with HNBR/EPDM seal
AH	DIN 11851 DN 40 PN 40, AISI 316L, EHEDG, 3A with HNBR/EPDM seal
AL	DIN 11851 DN 50 PN 25, AISI 316L, EHEDG, 3A with HNBR/EPDM seal
	Aseptic couplings
AS	DIN 11864-1 form A DN 40 for pipes to DIN 11850, AISI 316L, EHEDG, 3A with HNBR/EPDM seal
AT	DIN 11864-1 form A DN 50 for pipes to DIN 11850, AISI 316L, EHEDG, 3A with HNBR/EPDM seal
	EN flanges
EK	DN 50 PN 10-40 B1, AISI 316L
EU	DN 80 PN 10-40 B1, AISI 316L
WK	DN 50 PN 10-40, AISI 316L with ECTFE coating
WU	DN 80 PN 10-40, AISI 316L with ECTFE coating
	ANSI flanges
K1	1 1/2" 150 lbs RF, AISI 316/316L
K2	1 1/2" 300 lbs RF, AISI 316/316L
KJ	2" 150 lbs RF, AISI 316/316L
KK	2" 300 lbs RF, AISI 316/316L
KU	3" 150 lbs RF, AISI 316/316L
KV	3" 300 lbs RF, AISI 316/316L
KW	4" 150 lbs RF, AISI 316/316L
KX	4" 300 lbs RF, AISI 316/316L
VJ	2" 150 lbs, AISI 316/316L with ECTFE coating
VU	3" 150 lbs, AISI 316/316L with ECTFE coating
VN	4" 150 lbs, AISI 316/316L with ECTFE coating
ZJ	2" 150 lbs RF, PVDF
ZU	3" 150 lbs RF, PVDF
	JIS flange
RI	10K 50A RF, AISI 316L
	Other
HA	Universal process adapter incl. silicone molded seal
XU	Weld spud 75 mm, AISI 316L

PMC45										Order code

→ For continuation of ordering information of PMC45, see the following page.

PMC45 (continued)

80								Sensor seal:	
								1	FKM Viton
								2	HNBR (FDA)
								4	EPDM (FDA)
								C	Chemraz
								7	Kalrez
								A	FKM Viton, oil + grease free

PMC45										Complete order code

PMP41

10	Approval:
R	For non-hazardous areas
G	ATEX II 1/2 G EEx ia IIC T6
F	ATEX II 1 G EEx ia IIC T6
H	ATEX II 2 G EEx ia IIC T6
N	ATEX II 3 G EEx nA II T5
J	ATEX II 1/2 D1/2G EEx ia IIC T6
K	ATEX II 1/2 D EEx ia II T6
L	ATEX II 1/3 D
C	CSA General Purpose
S	CSA IS, Class I, II, III Division 1, Groups A - G
T	CSA XP, Class I, II, III Division 1, Groups E - G (dust Ex); Class I Division 2, Groups A - D
P	FM IS, Class I, II, III Division 1, Groups A - G
M	FM DIP, Class I, II, III Division 1, Groups E - G
V	TIIS IS Ex ia IIC T6

20		Housing; Electrical connection:
	E1	AISI 316L; gland M20, IP 66
	C1	AISI 316L; thread NPT 1/2, IP 66
	G1	AISI 316L; thread G 1/2, IP 66
	H1	AISI 316L; plug Han7D, IP 65
	L1	AISI 316L; plug M12, IP 66 (in conjunction with absolute pressure sensors IP 68/NEMA 6P)
	K1	AISI 316L; cable 5 m, IP 68 + atmospheric pressure compensation
	E2	Aluminum; gland M20, IP 66
	C2	Aluminum; thread NPT 1/2, IP 66
	G2	Aluminum; thread G 1/2, IP 66
	H2	Aluminum; plug Han7D, IP 65
	L2	Aluminum; plug M12, IP 66 (in conjunction with absolute pressure sensors IP 68/NEMA 6P)
	K2	Aluminum; cable 5 m, IP 68 + atmospheric pressure compensation

30		Sensor range; MWP; OPL:		
		Sensor range	**MWP (maximum working pressure)**	**OPL (over pressure limit)**
		Sensors for gauge pressure		
3H		0 to 1 bar/100 kPa/15 psi g	2.7 bar/270 kPa/40 psi	4 bar/400 kPa/60 psi
3M		0 to 4 bar/400 kPa/60 psi g	10.7 bar/1.07 MPa/160 psi	16 bar/1.6 MPa/240 psi
3P		0 to 10 bar/1 MPa/150 psi g	26.7 bar/2.67 MPa/400 psi	40 bar/4 MPa/600 psi
3S		0 to 40 bar/4 MPa/600 psi g	106.7 bar/10.67 MPa/ 1600 psi	160 bar/16 MPa/24000 psi
3U		0 to 100 bar/10 MPa/1500 psi g	266.7 bar/26.67 MPa/ 4000 psi	400bar/40 MPa/6000 psi
3Z		0 to 400 bar/40 MPa/6000 psi g	400 bar/40 MPa/6000 psi	600 bar/60 MPa/9000 psi
		Sensors for negative gauge pressure		
7H		–1 to 1 bar/–100 to 100 kPa/–15 to 15 psi g	2.7 bar/270 kPa/40 psi	4 bar/400 kPa/60 psi
7M		–1 to 4 bar/–100 to 400 kPa/–15 to 60 psi g	10.7 bar/1.07 MPa/160 psi	16 bar/1.6 MPa/240 psi
7P		–1 to 10 bar/–100 to 1 MPa/ –15 to 150 psi g	26.7 bar/2.67 MPa/400 psi	40 bar/4 MPa/600 psi
		Sensors for absolute pressure		
4H		0 to 1 bar/100 kPa/15 psi abs.	2.7 bar/270 kPa/40 psi	4 bar/400 kPa/60 psi
4M		0 to 4 bar/400 kPa/60 psi abs.	10.7 bar/1.07 MPa/160 psi	16 bar/1.6 MPa/240 psi
4P		0 to 10 bar/1 MPa/150 psi abs.	26.7 bar/2.67 MPa/400 psi	40 bar/4 MPa/600 psi g
4S		0 to 40 bar/4 MPa/600 psi abs.	106.7 bar/10.67 MPa/ 1600 psi	160 bar/16 MPa/24000 psi
4U		0 to 100 bar/10 MPa/1500 psi abs.	266.7 bar/26.67 MPa/ 4000 psi	400 bar/40 MPa/6000 psi
4Z		0 to 400 bar/40 MPa/6000 psi abs.	400 bar/40 MPa/6000 psi	600 bar/60 MPa/9000 psi

40		Calibration; Unit:
	1	0.2% sensor range; mbar/bar
	2	0.2% sensor range; kPa/MPa
	3	0.2% sensor range; mm/mH_2O
	4	0.2% sensor range; inH_2O/ftH_2O
	5	0.2% sensor range; kgf/cm2
	6	0.2% sensor range; psi
	B	0.2% see additional specification
	C	0.1% see additional specification
	D	DKD certificate; see additional specification

PMP41									Order code

→ For continuation of ordering information of PMP41, see the following page.

PMP41 (continued)

50	Output; Operation:
A	4 to 20 mA analog; without display
C	4 to 20 mA analog; bar graph
H	4 to 20 mA HART; without display
J	4 to 20 mA HART; 4-digit pressure display + bar graph
P	PROFIBUS PA; without display
R	PROFIBUS PA; display 4-digit pressure display + bar graph
W	Without electronics; without display

60	Additional option:
1	Basic version
2	Mounting bracket, wall/pipe
C	EN10204 3.1 (wetted) inspection certificate
S	GL/RINA marine approval

70	Process connection:
	Threaded connection
1M	Thread ISO 228 G1/2, AISI 316L
1D	Thread ISO 228 G1/2 seal O-ring, AISI 316L, flush-mounted, for adapter with order number: 52002643
1F	Thread ISO 228 G1/2 seal DIN 3852, AISI 316L, flush-mounted
1G	Thread ANSI 1/2 MNPT, AISI 316L
1X	Thread ANSI 1/2 FNPT, AISI 316L
1S	Thread JIS B0202 G1/2 (male), AISI 316L
1 K	Thread JIS B0203 R1/2 (male), AISI 316L
1T	Thread DIN13 M 20x1.5, AISI 316L

80	Seal; Fill fluid:
1	FKM Viton; mineral oil
4	FKM Viton, inert oil, oil + grease free
F	NBR; mineral oil (FDA)
H	FKM Viton; mineral oil (FDA)
P	FTFE; mineral oil
A	Welded; mineral oil
C	Welded; inert oil, oxygen service
D	Welded, inert oil, oil + grease free

PMP41	Complete order code

PMP45

10	Approval:
R	For non-hazardous areas
G	ATEX II 1/2 G EEx ia IIC T6
F	ATEX II 1 G EEx ia IIC T6
H	ATEX II 2 G EEx ia IIC T6
N	ATEX II 3 G EEx nA II T5
J	ATEX II 1/2 D 1/2G EEx ia IIC T6
K	ATEX II 1/2 D EEx ia IIC T6
L	ATEX II 1/3 D
C	CSA General Purpose
S	CSA IS, Class I, II, III Division 1, Groups A - G
T	CSA XP, Class II, III, Division 1, Groups E – G (dust Ex), Class I, Division 2, Groups A– D
P	FM IS, Class I, II, III, Division 1, Groups A – G
M	FM DIP, Class II, III Division 1, Groups E – G
V	TIIS IS, Ex ia IIC T6

20		Housing; Electrical connection:
	E1	AISI 316L; gland M20, IP 66
	C1	AISI 316L; thread NPT 1/2, IP 66
	G1	AISI 316L; thread G 1/2, IP 66
	H1	AISI 316L; plug Han7D, IP 65
	L1	AISI 316L; plug M12, IP 66 (in conjunction with absolute pressure sensors IP 68/NEMA 6P)
	K1	AISI 316L; cable 5 m, IP 68 + atmospheric pressure compensation
	E2	Aluminum; gland M20, IP 66
	C2	Aluminum; thread NPT 1/2, IP 66
	G2	Aluminum; thread G 1/2, IP 66
	H2	Aluminum; plug Han7D, IP 65
	L2	Aluminum; plug M12, IP 66 (in conjunction with absolute pressure sensors IP 68/NEMA 6P)
	K2	Aluminum; cable 5 m, IP 68 + atmospheric pressure compensation

30		Sensor range; MWP; OPL:		
		Sensor range	**MWP (maximum working pressure)**	**OPL (over pressure limit)**
		Sensors for gauge pressure		
	3H	0 to 1 bar/100 kPa/15 psi g	2.7 bar/270 kPa/40 psi	4 bar/400 kPa/60 psi
	3M	0 to 4 bar/400 kPa/60 psi g	10.7 bar/1.07 MPa/160 psi	16 bar/1.6 MPa/240 psi
	3P	0 to 10 bar/1 MPa/150 psi g	26.7 bar/2.67 MPa/400 psi	40 bar/4 MPa/600 psi
	3S	0 to 40 bar/4 MPa/600 psi g	106.7 bar/10.67 MPa/ 1600 psi	160 bar/16 MPa/24000 psi
	3U	0 to 100 bar/10 MPa/1500 psi g	266.7 bar/26.67 MPa/ 4000 psi	400 bar/40 MPa/6000 psi
	3Z	0 to 400 bar/40 MPa/6000 psi g	400 bar/40 MPa/6000 psi	600 bar/60 MPa/9000 psi
		Sensors for negative gauge pressure		
	7H	–1 to 1 bar/–100 to 100 kPa/–15 to 15 psi g	2.7 bar/270 kPa/40 psi	4 bar/400 kPa/60 psi
	7M	–1 to 4 bar/–100 to 400 kPa/–15 to 60 psi g	10.7 bar/1.07 MPa/160 psi	16 bar/1.6 MPa/240 psi
	7P	–1 to 10 bar/–100 to 1 MPa/ –15 to 150 psi g	26.7 bar/2.67 MPa/400 psi	40 bar/4 MPa/600 psi
		Sensors for absolute pressure		
	4H	0 to 1 bar/100 kPa/15 psi abs.	2.7 bar/270 kPa/40 psi	4 bar/400 kPa/60 psi
	4M	0 to 4 bar/400 kPa/60 psi abs.	10.7 bar/1.07 MPa/160 psi	16 bar/1.6 MPa/240 psi
	4P	0 to 10 bar/1 MPa/150 psi abs.	26.7 bar/2.67 MPa/400 psi	40 bar/4 MPa/600 psi g
	4S	0 to 40 bar/4 MPa/600 psi abs.	106.7 bar/10.67 MPa/ 1600 psi	160 bar/16 MPa/24000 psi
	4U	0 to 100 bar/10 MPa/1500 psi abs.	266.7 bar/26.67 MPa/ 4000 psi	400 bar/40 MPa/6000 psi
	4Z	0 to 400 bar/40 MPa/6000 psi abs.	400 bar/40 MPa/6000 psi	600 bar/60 MPa/9000 psi

40		Calibration; Unit:
	1	0.2% sensor range; mbar/bar
	2	0.2% sensor range; kPa/MPa
	3	0.2% sensor range; mm/mH_2O
	4	0.2% sensor range; inH_2O/ftH_2O
	5	0.2% sensor range; kgf/cm2
	6	0.2% sensor range; psi
	B	0.2% see additional specification
	C	0.1% see additional specification
	D	DKD certificate; see additional specification

PMP45									Order code

→ For continuation of ordering information of PMP45, see the following page.

PMP45 (continued)

50	Output; operation:
A	4 to 20 mA analog; without display
C	4 to 20 mA analog; bar graph
H	4 to 20 mA HART; without display
J	4 to 20 mA HART; 4-digit pressure display + bar graph
P	PROFIBUS PA; without display
R	PROFIBUS PA; 4-digit pressure display + bar graph
W	Without electronics; without display

60	Additional option:
1	Basic version
C	EN10204-3.1 (wetted) inspection certificate
S	GL (German Lloyd) marine certificate

70	Process connection:
	Threaded connection
CD	Thread ISO 228 G1 metal taper seal, AISI 316L, 3A, flush-mounted, for adapter with order number: 52005087
BB	Thread ANSI MNPT 3/4, AISI 316L, flush-mounted
	Clamp connections
DA	Clamp ISO 2852 DN 22 (3/4"), DIN 32676 DN 20, AISI 316L, 3A
DB	Tri-Clamp, ISO 2852 DN 25 – 38 (1 – 1 1/2"), DIN 32676 DN 25 – 40, AISI 316L, 3A,
DL	Tri-Clamp, ISO 2852 DN 40 – 51 (2"), DIN 32676 DN 50, AISI 316L, 3A
	Hygienic connections
EB	SMS 1" PN 25, AISI 316L, 3A
EG	SMS 1 1/2" PN 25, AISI 316L, 3A
LB	Varivent F for pipes DN 25 – 32 PN 40, AISI 316L, 3A
LG	Varivent B for pipes DN 10 – 15 PN 40, AISI 316L, 3A
AB	DIN 11851 DN 25 PN 40, AISI 316L, 3A

80	Diaphragm, Fill fluid:
A	AISI 316L, mineral oil (only for process connection BB)
F	AISI 316L, mineral oil (FDA)

PMP45	Complete order code

PMP46

10	Approval:
R	For non-hazardous areas
G	ATEX II 1/2 G EEx ia IIC T6
F	ATEX II 1 G EEx ia IIC T6
H	ATEX II 2 G EEx ia IIC T6
N	ATEX II 3 G EEx nA II T5
J	ATEX II 1/2 D 1/2G EEx ia IIC T6
K	ATEX II 1/2 D EEx ia IIC T6
L	ATEX II 1/3 D
C	CSA General Purpose
S	CSA IS, Class I, II, III Division 1, Groups A – G
T	CSA XP, Class II, III, Division 1, Groups E – G (dust Ex), Class I, Division 2, Groups A – D
P	FM IS, Class I, II, III, Division 1, Groups A – G
M	FM DIP, Class II, III Division 1, Groups E – G
V	TIIS IS, Ex ia IIC T6

20		Housing; Electrical connection:
	E1	AISI 316L; gland M20, IP 66
	C1	AISI 316L; thread NPT 1/2, IP 66
	G1	AISI 316L; thread G 1/2, IP 66
	H1	AISI 316L; plug Han7D, IP 65
	L1	AISI 316L; plug M12, IP 66 (in conjunction with absolute pressure sensors IP 68/NEMA 6P)
	K1	AISI 316L; cable 5 m, IP 68 + atmospheric pressure compensation
	E2	Aluminum; gland M20, IP 66
	C2	Aluminum; thread NPT 1/2, IP 66
	G2	Aluminum; thread G 1/2, IP 66
	H2	Aluminum; plug Han7D, IP 65
	L2	Aluminum; plug M12, IP 66 (in conjunction with absolute pressure sensors IP 68/NEMA 6P)
	K2	Aluminum; cable 5 m, IP 68 + atmospheric pressure compensation

30	Sensor range; MWP; OPL:		
	Sensor range	**MWP (maximum working pressure)**	**OPL (over pressure limit)**
	Sensors for gauge pressure		
3H	0 to 1 bar/100 kPa/15 psi g	2.7 bar/270 kPa/40 psi	4 bar/400 kPa/60 psi
3M	0 to 4 bar/400 kPa/60 psi g	10.7 bar/1.07 MPa/160 psi	16 bar/1.6 MPa/240 psi
3P	0 to 10 bar/1 MPa/150 psi g	26.7 bar/2.67 MPa/400 psi	40 bar/4 MPa/600 psi
3S	0 to 40 bar/4 MPa/600 psi g	106.7 bar/10.67 MPa/ 1600 psi	160 bar/16 MPa/24000 psi
	Sensors for negative gauge pressure		
7H	–1 to 1 bar/–100 to 100 kPa/–15 to 15 psi g	2.7 bar/270 kPa/40 psi	4 bar/400 kPa/60 psi
7M	–1 to 4 bar/–100 to 400 kPa/–15 to 60 psi g	10.7 bar/1.07 MPa/160 psi	16 bar/1.6 MPa/240 psi
7P	–1 to 10 bar/–100 to 1 MPa/ –15 to 150 psi g	26.7 bar/2.67 MPa/400 psi	40 bar/4 MPa/600 psi
	Sensors for absolute pressure		
4H	0 to 1 bar/100 kPa/15 psi abs.	2.7 bar/270 kPa/40 psi	4 bar/400 kPa/60 psi
4M	0 to 4 bar/400 kPa/60 psi abs.	10.7 bar/1.07 MPa/160 psi	16 bar/1.6 MPa/240 psi
4P	0 to 10 bar/1 MPa/150 psi abs.	26.7 bar/2.67 MPa/400 psi	40 bar/4 MPa/600 psi g
4S	0 to 40 bar/4 MPa/600 psi abs.	106.7 bar/10.67 MPa/ 1600 psi	160 bar/16 MPa/24000 psi

40	Calibration; Unit:
1	0.2% sensor range; mbar/bar
2	0.2% sensor range; kPa/MPa
3	0.2% sensor range; mm/mH_2O
4	0.2% sensor range; inH_2O/ftH_2O
5	0.2% sensor range; kgf/cm2
6	0.2% sensor range; psi
B	0.2% see additional specification
D	DKD certificate; see additional specification

PMP46									Order code

→ For continuation of ordering information of PMP46, see the following page.

PMP46 (continued)

50	Output; Operation:
A	4 to 20 mA analog; without display
C	4 to 20 mA analog; bar graph
H	4 to 20 mA HART; without display
J	4 to 20 mA HART; 4-digit pressure display + bar graph
P	PROFIBUS PA; without display
R	PROFIBUS PA; 4-digit pressure display + bar graph
W	Without electronics; without display

60	Additional option:
1	Basic version
2	Mounting bracket, wall/pipe
C	EN10204-3.1 material (wetted) inspection certificate
P	EN10204-3.1 material, Ra < 0.4 µm/15.75 µin (180 grit), electropolished, (wetted) inspection certificate (in conjunction with process connection versions "DF", "DL" and "LL")
S	GL (German Lloyd) marine certificate

70	Process connection:
	Clamp connections
DF	Tri-Clamp, ISO 2852 DN 25 (1"), DIN 32676 DN 25, AISI 316L, 3A
DG	Tri-Clamp, ISO 2852 DN 38 (1 1/2"), DIN 32676 DN 40, AISI 316L, 3A
DL	Tri-Clamp, ISO 2852 DN 51 (2"), DIN 32676 DN 50, AISI 316L, 3A
DU	Tri-Clamp, ISO 2852 DN 76.1 (3"), AISI 316L, 3A
	Clamp pipe diaphragm seal (RDM)
SA	Clamp DN 10 (3/4") RDM, AISI 316L
SB	Tri-Clamp ISO 2852 DN 25 (1") RDM, AISI 316L
SG	Tri-Clamp, ISO 2852 DN 38 (1 1/2") RDM, AISI 316L, 3.1 + pressure test PED
SL	Tri-Clamp, ISO 2852 DN 51 (2 ") RDM, AISI 316L, 3A, 3.1 + pressure test PED Cat. II
	Hygienic connections
EG	SMS 1 1/2" PN 25, AISI 316L, 3A
EL	SMS 2" PN 25, AISI 316L, 3A
FG	APV-RJT 1 1/2" PN 40, AISI 316L, 3A
FL	APV-RJT 2" PN 40, AISI 316L, 3A
GG	APV-ISS 1 1/2" PN 40, AISI 316L, 3A
GL	APV-ISS 2" PN 40, AISI 316L, 3A
KL	DRD 65 mm PN 25, AISI 316L, 3A
LB	Varivent F for pipes DN 25 – 32 PN 40, AISI 316L, 3A
LL	Varivent N for pipes DN 40 – 162 PN 40, AISI 316L, 3A
AG	DIN 11851 DN 32 PN 40, AISI 316L, 3A
AH	DIN 11851 DN 40 PN 40, AISI 316L, 3A
AL	DIN 11851 DN 50 PN 25, AISI 316L, 3A
	Hygienic pipe diaphragm seal (RDM)
PB	DIN 11851 DN 25 PN 40 RDM, AISI 316L, 3A
PH	DIN 11851 DN 40 PN 40 RDM, AISI 316L, 3A
PL	DIN 11851 DN 50 PN 40 RDM, AISI 316L, 3A

80	Transmitter mounting; fill fluid:
A	Direct; silicone oil
D	Direct; vegetable oil (FDA)
E	Direct; glycerine
L	Temperature isolator; vegetable oil (FDA)
G	Temperature isolator; high-temperature oil
H	..... m capillary; high-temperature oil (capillary > 1 m, only as of DN 50/2"; capillary length: 1-10 m, price independent of length)
F	..... m capillary; vegetable oil (FDA) (capillary > 1 m, only as of DN 50/2"; capillary length: 1-10 m, price independent of length)
J	..... m capillary; silicone oil (capillary > 1 m, only as of DN 50/2"; capillary length: 1-10 m, price independent of length)
K	1 m capillary; high-temperature oil
O	1 m capillary; silicone oil
P	1 m capillary; vegetable oil (FDA)
N	Oxygen service; inert oil

PMP46	Complete order code

PMP48

10	Approval:
R	For non-hazardous areas
G	ATEX II 1/2 G EEx ia IIC T6
F	ATEX II 1 G EEx ia IIC T6
H	ATEX II 2 G EEx ia IIC T6
N	ATEX II 3 G EEx nA II T5
J	ATEX II 1/2 D 1/2G EEx ia IIC T6
K	ATEX II 1/2 D EEx ia IIC T6
L	ATEX II 1/3 D
C	CSA General Purpose
S	CSA IS, Class I, II, III Division 1, Groups A - G
T	CSA XP, Class II, III, Division 1, Groups E – G (dust Ex), Class I, Division 2, Groups A – D
P	FM IS, Class I, II, III, Division 1, Groups A – G
M	FM DIP, Class II, III Division 1, Groups E – G
V	TIIS IS, Ex ia IIC T6

20		Housing; Electrical connection:
	E1	AISI 316L; gland M20, IP 66
	C1	AISI 316L; thread NPT 1/2, IP 66
	G1	AISI 316L; thread G 1/2, IP 66
	H1	AISI 316L; plug Han7D, IP 65
	L1	AISI 316L; plug M12, IP 66 (in conjunction with absolute pressure sensors IP 68/NEMA 6P)
	K1	AISI 316L; cable 5 m, IP 68 + atmospheric pressure compensation
	E2	Aluminum; gland M20, IP 66
	C2	Aluminum; thread NPT 1/2, IP 66
	G2	Aluminum; thread G 1/2, IP 66
	H2	Aluminum; plug Han7D, IP 65
	L2	Aluminum; plug M12, IP 66 (in conjunction with absolute pressure sensors IP 68/NEMA 6P)
	K2	Aluminum; cable 5 m, IP 68 + atmospheric pressure compensation

30		Sensor range; MWP; OPL:		
		Sensor range	**MWP (maximum working pressure)**	**OPL (over pressure limit)**
		Sensors for gauge pressure		
3H		0 to 1 bar/100 kPa/15 psi g	2.7 bar/270 kPa/40 psi	4 bar/400 kPa/60 psi
3M		0 to 4 bar/400 kPa/60 psi g	10.7 bar/1.07 MPa/160 psi	16 bar/1.6 MPa/240 psi
3P		0 to 10 bar/1 MPa/150 psi g	26.7 bar/2.67 MPa/400 psi	40 bar/4 MPa/600 psi
3S		0 to 40 bar/4 MPa/600 psi g	106.7 bar/10.67 MPa/ 1600 psi	160 bar/16 MPa/24000 psi
3U		0 to 100 bar/10 MPa/1500 psi g	266.7 bar/26.67 MPa/ 4000 psi	400 bar/40 MPa/6000 psi
3Z		0 to 400 bar/40 MPa/6000 psi g	400 bar/40 MPa/6000 psi	600 bar/60 MPa/9000 psi
		Sensors for negative gauge pressure		
7H		–1 to 1 bar/–100 to 100 kPa/–15 to 15 psi g	2.7 bar/270 kPa/40 psi	4 bar/400 kPa/60 psi
7M		–1 to 4 bar/–100 to 400 kPa/–15 to 60 psi g	10.7 bar/1.07 MPa/160 psi	16 bar/1.6 MPa/240 psi
7P		–1 to 10 bar/–100 to 1 MPa/ –15 to 150 psi g	26.7 bar/2.67 MPa/400 psi	40 bar/4 MPa/600 psi
		Sensors for absolute pressure		
4H		0 to 1 bar/100 kPa/15 psi abs.	2.7 bar/270 kPa/40 psi	4 bar/400 kPa/60 psi
4M		0 to 4 bar/400 kPa/60 psi abs.	10.7 bar/1.07 MPa/160 psi	16 bar/1.6 MPa/240 psi
4P		0 to 10 bar/1 MPa/150 psi abs.	26.7 bar/2.67 MPa/400 psi	40 bar/4 MPa/600 psi g
4S		0 to 40 bar/4 MPa/600 psi abs.	106.7 bar/10.67 MPa/ 1600 psi	160 bar/16 MPa/24000 psi
4U		0 to 100 bar/10 MPa/1500 psi abs.	266.7 bar/26.67 MPa/4000 psi	400 bar/40 MPa/6000 psi
4Z		0 to 400 bar/40 MPa/6000 psi abs.	400 bar/40 MPa/6000 psi	600 bar/60 MPa/9000 psi

40	Calibration; Unit:
1	0.2% sensor range; mbar/bar
2	0.2% sensor range; kPa/MPa
3	0.2% sensor range; mm/mH_2O
4	0.2% sensor range; inH_2O/ftH_2O
5	0.2% sensor range; kgf/cm2
6	0.2% sensor range; psi
B	0.2% see additional specification
D	DKD certificate; see additional specification

PMP48										Order code

→ For continuation of ordering information of PMP48, see the following page.

PMP48 (continued)

50	Output; Operation:
A	4 to 20 mA analog; without display
C	4 to 20 mA analog; bar graph
H	4 to 20 mA HART; without display
J	4 to 20 mA HART; 4-digit pressure display + bar graph
P	PROFIBUS PA; without display
R	PROFIBUS PA; 4-digit display + bar graph
W	Without electronics; without display

60	Additional option:
1	Basic version
2	Mounting bracket, wall/pipe
C	EN10204 3.1 (wetted) inspection certificate
S	GL (German Lloyd) marine certificate

70	Process connection:
	Threaded connections
CA	Thread ISO 228 G 1/2, AISI 316L, separator
AF	Thread ISO 228 G 1, AISI 316L
AG	Thread ISO 228 G 1 1/2, AISI 316L
AR	Thread ISO 228 G 2, AISI 316L
DA	Thread ANSI 1/2 NPT, AISI 316L, separator
BF	Thread ANSI 1 NPT, AISI 316L
BG	Thread ANSI 1 1/2 NPT, AISI 316L
BR	Thread ANSI 2 NPT, AISI 316L
	EN flanges
EB	DN 25 PN 10 – 40 B1, AISI 316L
EC	DN 25 PN 64 – 160 E, AISI 316L
ED	DN 25 PN 250 E, AISI 316L
EF	DN 25 PN 400 E, AISI 316L
EK	DN 50 PN 10-40 B1, AISI 316L
EM	DN 50 PN 63 B2, AISI 316L
EN	DN 50 PN 100-160 E, AISI 316L
EP	DN 50 PN 250 E, AISI 316L
ER	DN 50 PN 400 E, AISI 316L
EU	DN 80 PN 10 – 40 B1, AISI 316L
	EN flanges with extended diaphragm seal
FK	DN 50 PN 10 – 40 B1, AISI 316L, extended diaphragm seal 50 mm
GK	DN 50 PN 10 – 40 B1, AISI 316L, extended diaphragm seal 100 mm
JK	DN 50 PN 10 – 40 B1, AISI 316L, extended diaphragm seal 200 mm
FU	DN 80 PN 10 – 40 B1, AISI 316L, extended diaphragm seal 50 mm
GU	DN 80 PN 10 – 40 B1, AISI 316L, extended diaphragm seal 100 mm
JU	DN 80 PN 10 – 40 B1, AISI 316L, extended diaphragm seal 200 mm
	ANSI flanges
KB	1" 150 lbs RF, AISI 316/316L
KC	1" 300 lbs RF, AISI 316/316L
KD	1" 400/600 lbs RF, AISI 316/316L
KE	1" 900/1500 lbs RF, AISI 316/316L
KF	1" 2500 lbs RF, AISI 316/316L
KJ	2" 150 lbs RF, AISI 316/316L
KK	2" 300 lbs RF, AISI 316/316L
KL	2" 400/600 lbs RF, AISI 316/316L
KM	2" 900/1500 lbs RF, AISI 316/316L
KN	2" 2500 lbs RF, AISI 316/316L
KU	3" 150 lbs RF, AISI 316/316L
KV	3" 300 lbs RF, AISI 316/316L
KW	4" 150 lbs RF, AISI 316/316L
KX	4" 300 lbs RF, AISI 316/316L
	For continuation of "Process connection," see next page.

PMP48											Order code

PMP48 (continued)

70	Process connection (continued):
	ANSI flanges with extended diaphragm seal
LJ	2" 150 lbs RF, AISI 316/316L, extended diaphragm seal 2"
MJ	2" 150 lbs RF, AISI 316/316L, extended diaphragm seal 4"
NJ	2" 150 lbs RF, AISI 316/316L, extended diaphragm seal 6"
LU	3" 150 lbs RF, AISI 316/316L, extended diaphragm seal 2"
MU	3" 150 lbs RF, AISI 316/316L, extended diaphragm seal 4"
NU	3" 150 lbs RF, AISI 316/316L, extended diaphragm seal 6"
LW	4" 150 lbs RF, AISI 316/316L, extended diaphragm seal 2"
MW	4" 150 lbs RF, AISI 316/316L, extended diaphragm seal 4"
NW	4" 150 lbs RF, AISI 316/316L, extended diaphragm seal 6"
	JIS flanges
RB	10K 25A RF, AISI 316L
RJ	10K 50A RF, AISI 316L
RU	10K 80A RF, AISI 316L

80	Transmitter mounting; Fill fluid:
A	Direct; silicone oil
D	Direct; vegetable oil (FDA)
E	Direct; glycerine
G	Temperature isolator; high-temperature oil
K	1 m capillary; high-temperature oil
P	1 m capillary; vegetable oil (FDA)
O	1 m capillary; silicone oil
H	..... m capillary; high-temperature oil (capillary > 1 m, only as of DN 50/2"; Capillary length: 1-10 m, price independent of length)
F	..... m capillary; vegetable oil (FDA) (capillary > 1 m, only as of DN 50/2"; Capillary length: 1-10 m, price independent of length)
J	..... m capillary; silicone oil (capillary > 1 m, only as of DN 50/2"; Capillary length: 1-10 m, price independent of length)
N	O_2 application; inert oil

90	Diaphragm material:
	Extended diaphragm seal versions only as 316L
1	AISI 316L
2	Alloy C276
5	Tantalum
7	AISI 316L with 0.09 PTFE foil (not for vacuum applications)
8	AISI 316L with 0.25 PTFE foil (not for vacuum applications)

PMP48	Complete order code

Documentation

Field of Activities

- Pressure measurement, powerful measuring instruments for process pressure, differential pressure, level and flow: FA004P/00/en

Technical Information

- EMC test procedures TI241F/00/en

Operating Instructions

- Cerabar M (4 to 20 mA analog): BA200P/00/en
- Cerabar M (4 to 20 mA HART): BA201P/00/en
- Cerabar M (PROFIBUS PA): BA222P/00/en

Functional Safety Manual (SIL)

- Cerabar M (4 to 20 mA HART): SD172P/00/en

Safety Instructions

Certificate/explosion protection	Device	Electronics	Documentation
ATEX II 1 G EEx ia IIC T6	PMC41, PMC45, PMP41, PMP45, PMP46, PMP48	– 4 to 20 mA HART – PROFIBUS PA	– XA297P – XA311P
ATEX II 1/2 G EEx ia IIC T6 or ATEX II 2 G EEx ia IIC T6	PMC41, PMC45, PMP41, PMP45, PMP46, PMP48	– 4 to 20 mA – 4 to 20 mA HART – PROFIBUS PA	– XA039P – XA039P – XA096P
ATEX II 1/2 G 1/2 D EEx ia IIC T6	PMC41, PMP41, PMP45, PMP46, PMP48	– 4 to 20 mA HART – PROFIBUS PA	– XA309P – XA310P
ATEX II 1/3 D	PMC41, PMP41, PMP45, PMP46, PMP48	– 4 to 20 mA – 4 to 20 mA HART – PROFIBUS PA	– XA040P – XA040P – XA098P
ATEX II 3 G EEx nA T5	PMC41, PMC45, PMP41, PMP45, PMP46, PMP48	– 4 to 20 mA – 4 to 20 mA HART – PROFIBUS PA	– XA052P – XA052P – XA052P
ATEX II 1/2 D EEx ia T6	PMC41, PMP41, PMP45, PMP46, PMP48	– 4 to 20 mA HART – PROFIBUS PA	– XA038P – XA097P

Installation/Control Drawings

Certificate/explosion protection	Device	Electronics	Documentation
FM IS Class I, II, III, Division 1, Groups A – G	PMC41, PMC45, PMP41, PMP45, PMP46, PMP48	– 4 to 20 mA – 4 to 20 mA HART – PROFIBUS PA	– ZD039P – ZD039P – ZD052P
CSA IS Class I, II, III, Division 1, Groups A – G	PMC41, PMC45, PMP41, PMP45, PMP46, PMP48	– 4 to 20 mA – 4 to 20 mA HART – PROFIBUS PA	– ZD040P – ZD040P – ZD051P

International Head Quarter

Endress+Hauser
GmbH+Co. KG
Instruments International
Colmarer Str. 6
79576 Weil am Rhein
Deutschland

Tel. +49 76 21 9 75 02
Fax +49 76 21 9 75 34 5
www.endress.com
info@ii.endress.com

Endress+Hauser
People for Process Automation

TI399P/00/en/09.05
CCS/FM+SGML 6.0