Operation Manual

for

Centrifugal Pumps Type

SLM NHO

Execution acc. to Directive 94/9/EC

07/2008

BA/EN-36900-Coversheet-02.doc

KLAUS UNION D-44795 BOCHUM BLUMENFELDSTRASSE 18 ☎ +49 (0) 234 45 95 – 0 FAX +49 (0) 234 45 95 7000 WWW.KLAUS-UNION.DE

Contents of Operation Manual

1. General ____ BA/EN-36900-01/..

2. Safety ____ BA/EN-21900-02/..

3. Transport, Preservation
   and Intermediate Storage ____ BA/EN-36900-03/..

4. Constructional Description ____ BA/EN-36900-04/..

5. Installation and Assembly ____ BA/EN-36900-05/..

6. Commissioning and Shutdown ____ BA/EN-36900-06/..

7. Maintenance ____ BA/EN-36900-07/..

8. Malfunctions,Causes and Elimination ____ BA/EN-21900-08/..

KLAUS UNION D-44795 BOCHUM BLUMENFELDSTRASSE 18 ☎ +49 (0) 234 45 95 – 0 FAX +49 (0) 234 45 95 7000 WWW.KLAUS-UNION.DE

This operation manual describes single-stage centrifugal pumps with magnet drive type SLM NHO.

Prior to commissioning, this operation manual must be read thoroughly and fully understood by the operational staff (erecting and qualified staff). The manual contains important instructions for the safe operation and designated use of the pump. Observing these instructions helps to achieve a high level of availability and a long working life of the pump while ensuring a safe operation.

Further operation manuals regarding components of the pump unit, e. g. electric motors, monitoring equipment, etc. shall equally be observed.

Pictorial representations and information given in this operation manual are subject to technical modifications resulting in the improvement of KLAUS UNION products.

This operation manual is a copyright of KLAUS UNION.

This operation manual includes technical instructions and drawings, which must not be reproduced (neither in total nor in part), distributed or exploited without authority for the purpose of competition or transmitted to third parties

KLAUS UNION GmbH & Co. KG

P.O. Box 10 13 49
D-44713 Bochum

Phone : +49 (0) 234 45 95 - 0
Telefax : +49 (0) 234 45 95 7000
Internet : www.klaus-union.de

1. General

This operation manual contains fundamental instructions to be observed during installation, operation and maintenance. By all means, this operation manual must be read by the installation personnel and the responsible qualified staff prior to installation and commissioning. The manual is always to be held available on site.

In addition to the general safety instructions given in this section, the special safety instructions mentioned in the following sections are to be observed.

KLAUS UNION will not assume any responsibility for damage incurred due to non-observance of this operation manual.

2. Marking of Safety Instructions

The safety instructions given in this operation manual are specially marked:

	Dangerous situation. Possible consequences: Damage to health and life of persons.

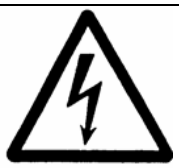	**Electrical hazard.** Possible consequences: Severe or even lethal injuries.

	Important instructions regarding explosion protection.

	Danger to health of persons with a pacemaker resulting from strong magnetic field.

In case of dangers to the machine and its functions the word

A T T E N T I O N

has been inserted.

References made on the machine itself, such as

- direction-of-rotation arrow
- dry-running warning
- marks for fluid connections

must by all means be observed and kept completely legible.

3. Qualification and Training of Staff

The staff responsible for the operation, maintenance, inspection and assembly must have the appropriate qualifications to perform these duties. Scope of responsibility, purview and supervision of staff must be clearly organized by the operating company. If the staff do not possess of the necessary expertise they must be trained to acquire the necessary knowledge. Furthermore, the operating company is to ensure that the contents of the operation manual is fully understood by the staff.

4. Dangers of Non-Compliance with Safety Instructions

The pump units described in the present operation manual are usually used in industrial plants for the transport of partly hazardous products. Non-compliance with safety instructions can therefore cause danger to persons as well as to the environment. Non-compliance will result in the loss of any claim for damages.

In detail, non-compliance with the operation manual can result in the following dangers, e.g.:

- Danger to persons by electrical, mechanical and chemical influences
- Danger to the environment by leakage of dangerous substances
- Failure of important functions of the machine or plant

5. Safety-Conscious Work

Safety instructions mentioned in this operation manual, existing national regulations for prevention of accidents as well as any internal working, operating and safety instructions of the operating company have to be observed.

	When operating the pump in hazardous locations, articles marked with the Ex–sign are to be given special attention and observance.

6. Safety Instructions for the Operating Company/Operator

	In case hot (temperature exceeding 50°C) or cold (temperature lower than 0°C) surfaces cause danger, they must be protected against accidental contact.

	Protection against accidental contact for rotating parts (e.g. coupling guard) must not be removed during operation of the machine.

	Electrical hazard may be given. The corresponding instructions are to be observed.

	Magnet drives cause strong magnetic fields. Persons with a pacemaker should not stay close to the magnet drive or come into close bodily contact with parts of it.

For processing dangerous products, evacuation lines or drains must be installed in a way to prevent any danger to people or environment. Local government regulations are to be observed.

7. Safety Instructions for Maintenance, Inspection and Assembly

The operating company has to ensure that any maintenance, inspection and assembly works are performed by authorized and qualified staff. The staff must have read and fully understood the operation manual.

As a matter of principle, any works on the pump unit must be carried out during standstill. The pump casing must be depressurized and fully drained. Instructions given in the section "Commissioning and Shutdown" of this operation manual must be observed.

⚠	**Pumps processing noxious liquids must be decontaminated.**

Immediately upon termination of the works, any safety and protection devices must be reinstalled and put into operation. During re-commissioning, the instructions given in the section "Commissioning and Shutdown" of this operation manual must be observed.

⚠	**The lifting capacity of lifting gear and tackle must be designed to correspond at least with the own weight of the complete pump unit.**

8. Unauthorized Modification and Manufacture of Spare Parts

Modification of or changes to the pump may only be carried out upon agreement with the manufacturer. Original spare parts and accessories authorized by the manufacturer contribute to your safety. KLAUS UNION will refuse to accept any responsibility for damage resulting from the use of other parts.

Ex	**If the pump is modified or changed without authority and / or other than original spare parts are used for repair works, the explosion protection will be forfeited.**

9. Designated Use

Operational reliability of the pump is only granted for its designated use. The limiting values indicated in the data sheet, particularly those regarding temperature of the pumped liquid and pumping capacity must not be exceeded.

Ex	**In case of pumps for which no datasheet is available (e. g. pool pumps), it must be checked prior to their commissioning, whether the allowable surface temperatures are not exceeded (refer to article „Temperature Limits“)**

Ex	**Driving motor and flexible coupling (in case of pumps of bearing-support construction) must have an approval for the use in areas subject to explosion hazards.**

10. Temperature Limits

Ex	**When being operated to its designated use, the pump's maximum surface temperature must not exceed the temperature category of the explosion protection zone.**

Ex	**The ignition temperature of the liquid must be at least by 50°C higher than the maximum surface temperature of the pump.**

The plant operator must ensure that the maximum allowable temperature of the hazardous area is not exceeded when hot liquids are processed. Refer to the following table for the maximum allowable temperature of the pumped liquid in accordance with the applicable temperature category:

Temperature Category	Maximum Temperature of the Pumped Liquid [°C]
T1	400
T2	270
T3	175
T4	110

In case of temperature categories T5 or T6, contact KLAUS UNION for further information.

Ex	**The pump is designed for use in ambient temperatures of 40°C max. For ambient temperatures exceeding 40 °C, explosion protection is no longer granted.**

11. Speed Limits

It is possible to operate the pump with a frequency converter. Lubrication of the journal bearing and cooling of the magnet drive are sufficient even at a slower speed.

Ex	**The maximum allowable speed is mentioned on the rating plate and in the data sheet. If the pump is operated at a speed exceeding the maximum speed indicated, explosion protection is no longer granted.**

Ex	**Prior to operating the pump unit with a frequency converter it must be checked, whether the driving motor is appropriate for that purpose.**

12. Sound Pressure Level

The sound pressure level L_{PA} and the sound power level L_{WA} of the pump measured to DIN 45635 are mentioned in the following diagramme dependent on the pump power and speed.

When assessing the total sound pressure level of the pump with motor, the motor data as indicated by the motor supplier are to be considered.

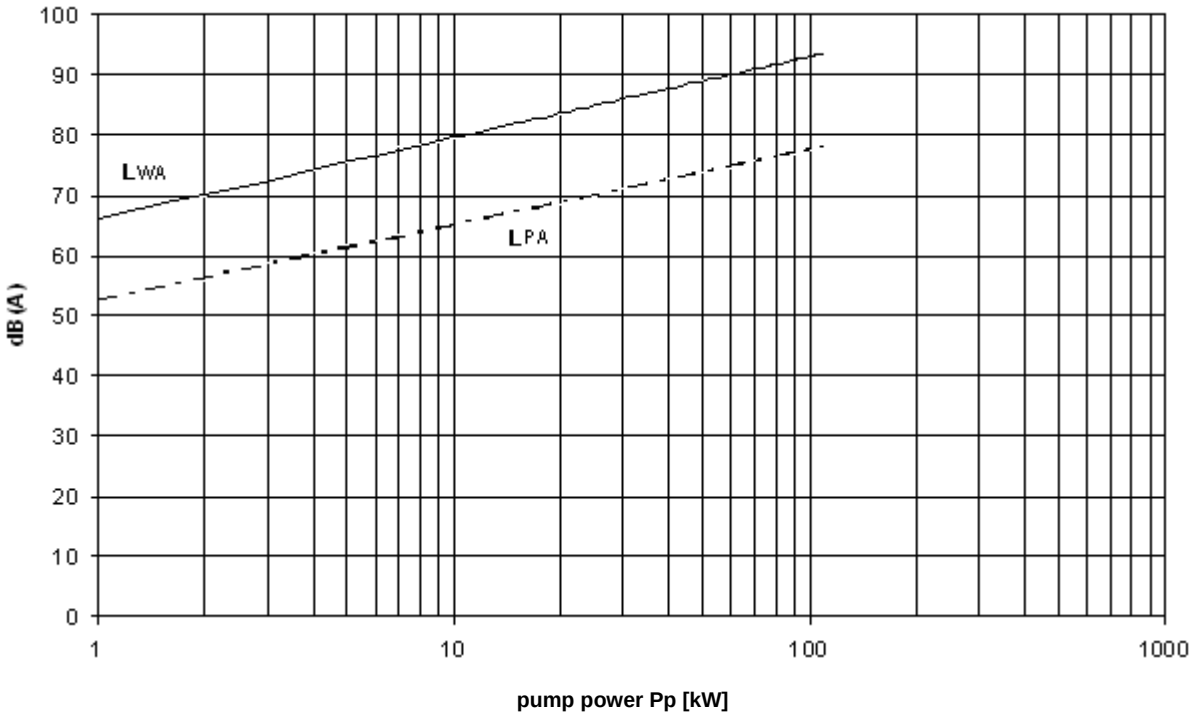

Centrifugal pump with magnet drive (without motor), sound power level L_{WA} and sound pressure level L_{PA}, speed n = 1450 1/min

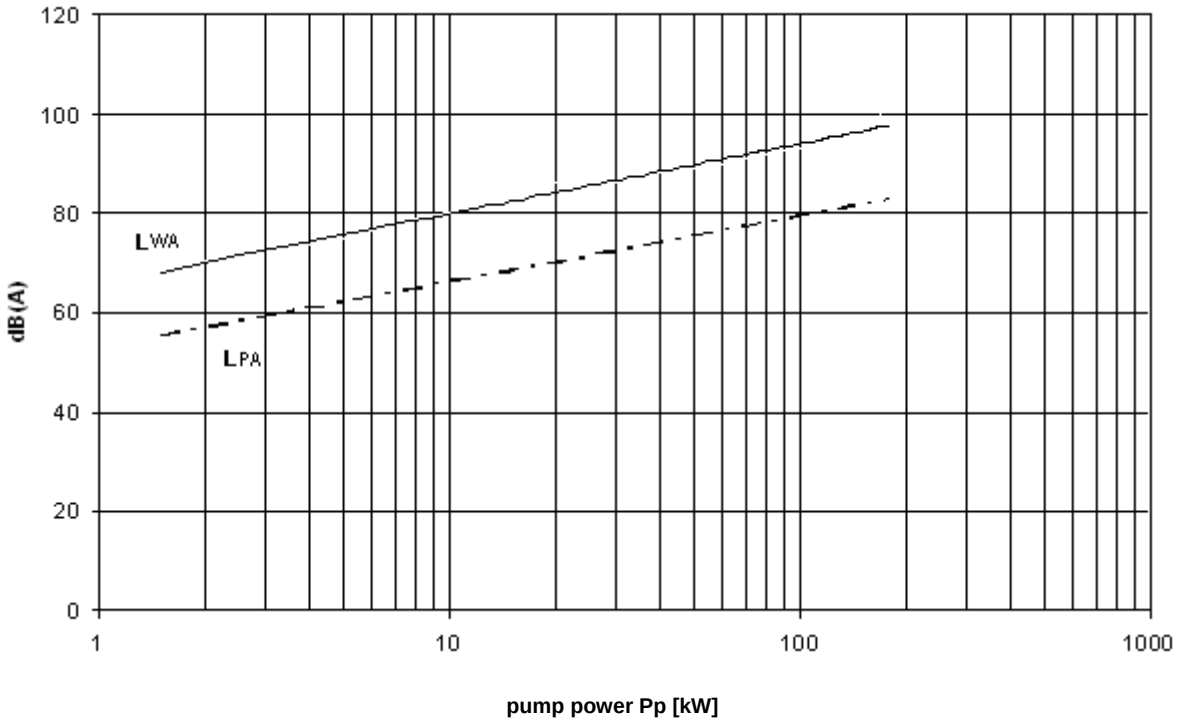

Centrifugal pump with magnet drive (without motor), sound power level L_{WA} and sound pressure level L_{PA}, speed n = 2900 1/min

1. Scope of Delivery

The contents of the individual packing units is listed in the packing list. Upon delivery, it is to be checked whether the consignment as mentioned on the packing list is complete. The supplier is to be given written notice immediately of any damage to the goods incurred during transport and / or missing parts.

2. Degree of Disaggregation

The degree of disaggregation depends on mode and conditions of transport, local conditions and lifting equipment available. On principle, it is possible to disassemble the pump into several sub-assemblies. However, the pump is to be transported in as complete a unit as possible. However, if the pump is delivered in sub-assemblies, refer to the drawing enclosed with the packing list for the contractual degree of disaggregation.

3. Packing

The transport route is decisive for the kind and material of packaging. If not particularly stipulated in the contract, the packing corresponds with the packaging regulations HPE laid down by the Bundesverband Holzmittel, Paletten, Exportverpackung e.V (Federal Association Wood for Packaging, Pallets, Export Packaging Inc.). The graphical symbols attached to the packing are to be observed:

Top

Fragile

Keep dry

Store away from heat

Use no hooks

Gravity center

Post here

4. Transport

Transport of the pumps must be carried out expertly. During transport, the pump must remain in a horizontal position and it must be ensured that it does not slip out of the transport suspension (ref. to drawing). Shocks and impacts are to be avoided.

⚠	**Suspended loads must not be transported over the heads of persons.**

⚠	**The lifting capacity of lifting gear and tackle must be designed to correspond at least with the own weight of the complete pump unit.**

The pump unit has to be transported as shown below.

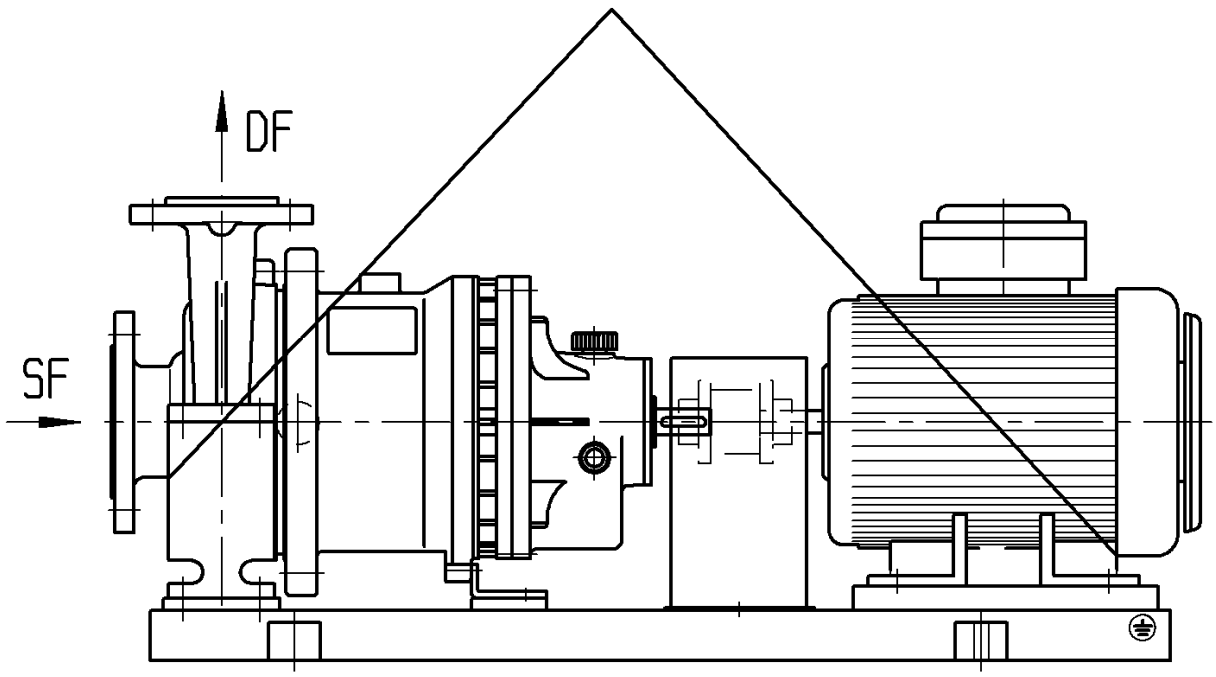

A T T E N T I O N	**If necessary, use available securing devices for transport.**

Never fasten the transport straps to the eye bolts of motor or pump lantern.

5. Preservation and Intermediate Storage of the Pump

The pump has been provided with a preservative either according to the customer's specification or as detailed in the operation manual. For a longer-term storage of the pump, special preservative measures are to be taken.

Prior to delivery, shaft ends have been equipped with protection caps for protection against dirt and damage. The connecting flanges of pump casing and supply / auxiliary connections are provided with flange covers or protection caps for protection against contamination. Protection caps and flange covers must not be removed during intermediate storage.

Having been packed into seaworthy cases for their transport, the pumps can be stored for a period of up to one year in their packing without special measures having to be taken. Nevertheless, to avoid damage to the anti-friction bearings in the pumps owing to vibrations, e. g. due to machines operated in close vicinity, the pumps should be stored in rooms free of vibrations.

For intermediate storage, parts of the following low-alloy components must be treated with a preservative:

- bare shaft ends of drive shafts
- surfaces of the pump casing made of cast steel GP240GH (1.0619) that are in contact with the pumped liquid

Concerning the anti-friction bearings it is understood that the lubricant in them will not be adversely affected during a one-year storage period provided the pumps are stored appropriately. If possible, the pumps should be turned by hand once a month during the storage period.

Commercially available preservatives can be used. For application and removal of the preservative, specific instructions given by the respective manufacturer must be observed. Preservation will protect the material for about 1 year. In case of a longer storage period, preservation must be renewed.

The storage area must be dry and free of dust.

Any plain metal parts must be oil- or grease-lubricated for protection against corrosion.

When storing pumps equipped with their driving motors, equally observe the instructions concerning preservation and storage given in the operation manual covering the driving motor.

A T T E N T I O N	**For outdoor storage, the pump unit must be provided with a water-proof cover.**

1. General Description

The sealless centrifugal pump type SLM NHO is a chemical pump with magnet drive. The pump is appropriate for the processing of aggressive, toxic, explosive, valuable, inflammable, malodorous or noxious liquids in industries where process temperatures mostly range between 250 °C and 400 °C.

2. Pump Identification Marking

SLM NHO 050-032-160-09T03 F

Line of Products
Nom. Dia. Suction Nozzle
Nom. Dia. Discharge Nozzle
Nom. Dia. Impeller
Size of Magnet Drive
Material of Magnets
Length of Magnets
Additional Constructions

Legend of identification letters for additional constructions:

H1	heated pump casing
H2	heated intermediate lantern
F	internal filter
E1	external feeding connection: - one external connection - internal flush bores with closed back
E2	external flushing / vent: - one external connection - internal flush bores open
D	double isolation shell
J	Inducer

3. Constructive Design

The centrifugal pump type SLM NHO is a single-stage, single-entry, horizontal radial flow centrifugal pump with magnet drive. The pump casing is of centerline design.
From impeller size 315 will also be intermediate lantern centerline executed.
In the case of the magnet-drive pump, the pump power is transmitted from the driving motor via the magnet drive to the impeller. The magnet drive transmits the torque without slip and hermetically seals the product chamber from the atmosphere. The isolation shell between the two magnet rotors forms the static sealing.

3.1 Hydraulic Component

Essentially, the hydraulic component comprises the impeller and the pump casing. Within the hydraulic component, the mechanical shaft output is transformed into hydraulic power. The pump shaft runs on journal bearings. The journal bearings are made of stellite / carbon or SSIC / carbon and lubricated by the pumped liquid. The product-side magnet rotor is mounted on the shaft that it drives.

3.2 Magnet Drive

The magnet drive hermetically seals the hydraulic component from the driving component on the atmosphere. The magnet drive comprises the inner and outer magnet rotors and the isolation shell. The isolation located between the two rotors seals the system. The power transfer is effected without slip.

3.3 Driving Component

The outer magnet rotor is fastened to the drive shaft. The shaft runs on oil-lubricated anti-friction bearings and is fitted with a labyrinth sealing. The bearing support is screwed on the intermediate lantern, the pump comes with a bare shaft end.

Being installed between the bearing support and the hydraulic component, the thermal barrier assures dissipation of heat generated during operation in this area. Thus, anti-friction bearing temperatures in the area of the area of the driving component are reduced when hot liquids are pumped.

4. Construction Variants

4.1 Heated Pump H1 and/or H2

The pumps are equipped with a heating jacket on the pump casing (H1) and / or with a heating jacket in the intermediate lantern (H2). Both heating jackets can be connected with a bypass-line or designed as separate heatings.

In the standard construction, the heating jackets are designed for a working pressure of 16 bar at 200°C (vapour) or 6 bar at 350°C (heat transfer oil).

The heating jackets may also be used for cooling purposes.

4.2 Internal Filter F

When processing liquids containing solids, the internal filter ensures that no particles of solid matter exceeding a defined size enter the flush flow channels and thus reach the magnet drive and the journal bearings respectively.

4.3 External Feeding and Flushing Connections E1 and E2

The external connections permit the external flushing, feeding or venting of the pump. Connection E1 is used when the constant external feeding of the magnet drive is required. Connection E2 is suitable for short-time flushing or external venting of the magnet drive.

4.4 Double Isolation Shell D

When a high level of safety is required, the pump can be equipped with a double-skin isolation shell. The isolation shell actually consists of two isolation shells with one of them put into the other. Each of the two isolation shells is designed to meet the requirements of the specified operation conditions. If one of them should fail, the system still remains sealed. The space between the two shells can be monitored.

4.5 Inducer J

When NPSH values prevailing in the plant are very low, inducers are used in many cases. They considerably reduce the pump’s NPSH throughout the pump’s entire operation range without modifying the pump’s characteristics. In most cases, it will be possible to retrofit pumps in the plant with an inducer without requiring major modification works.

1. General Instructions

Prior to installation, the pump should be checked for any damage it might have suffered during transport. The flange covers may only be removed right before installation.

When turning the pump shaft by hand, abradant noises may be heard from within the pump. These noises result from the grease-free assembly of the journal bearings. Having filled the pump with the pumped liquid, these noises will disappear.

KLAUS UNION cannot be held responsible for any damage resulting from inexpert installation.

The pictorial representations have been simplified.

	Prior to installing the pump with the pertaining driving motor in areas subject to explosion hazards, ensure that the entire equipment has been approved for the prevailing explosion protection zone.

	Instructions given in the operation manuals of the driving motor and the flexible coupling are to be observed.

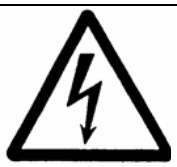	**The installation of electrical equipment is exclusively to be performed by qualified staff. Any regulations valid at the time are to be observed.**

	Magnet drives cause strong magnetic fields. Persons with a pacemaker should not stay close to the magnet drive or come into close bodily contact with parts of it.

2. Installation Conditions

Arrange pipework and equipment pertaining to the pump in a way to have enough space available for assembly and maintenance works. For dimensions of the pump refer to the attached installation plan.

The concrete foundation must have set before the pump is placed on it. The surface of the foundation must be plane and level.

3. Installation of SLM NHO

3.1 Installation of the Completely Assembled Unit

The complete unit mounted on the base plate comprises pump, motor and flexible coupling. The coupling guard covering the flexible coupling serves as a protection against accidental contact.

Install the unit according to the installation plan and align it using a spirit level. Insert the foundation bolts in the foundation and grout them with a fast setting grout-mixture. Once the grout mixture has set, tighten the foundation bolts fast always applying the same tightening moment.

3.2 Installation of the Partially Assembled Unit

In case the pump unit is not supplied as a complete unit but in sub-assemblies such as pump, coupling, motor and base plate, the installation is effected as described hereafter:
Insert the key into the key groove of the motor-side shaft end. Fit the motor-side coupling half on the shaft by means of a standard draw-on device. The same procedure is to be followed for the pump-side coupling half.

Align the axial distance between motor- and pump-side coupling halves according to the dimensions given in the installation plan. Compensate vertical shaft displacements by using plane-parallel shims.

Eliminate any misalignment of both coupling halves. Put a straight-edge on approx. 4 opposite points on the circumference of the coupling and observe the u. m. drawings.

The radial and axial variance between the two coupling halves must not exceed a maximum of 0.1 mm.

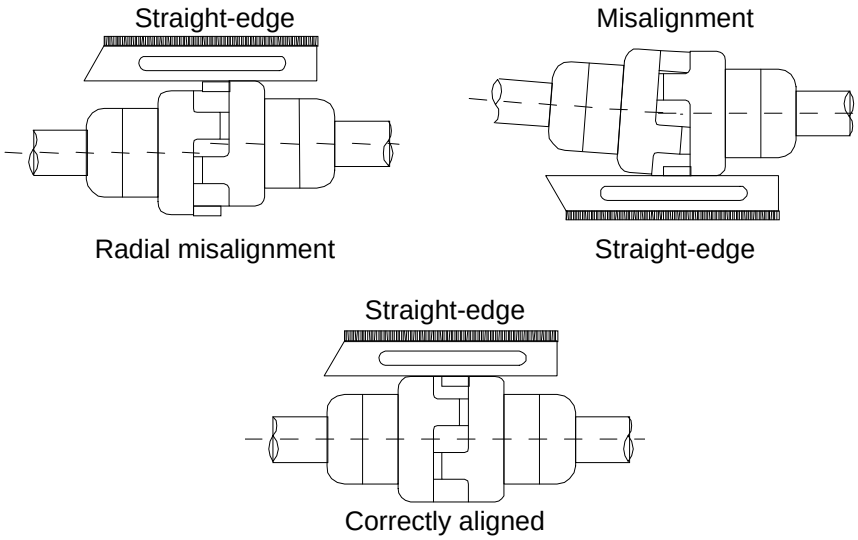

Align couplings with a diameter exceeding 120 mm with the help of a dial gauge.

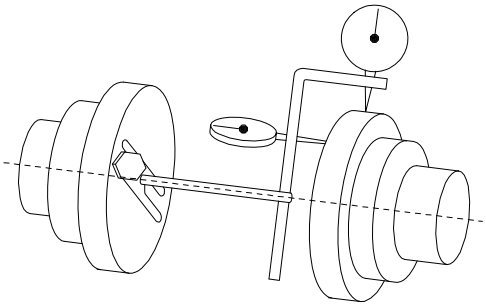

Compensate a vertical displacement by placing underneath or removing plan-parallel shims. Fix pump and motor on the base plate with the bolts provided for that purpose.

Install the completely assembled and aligned unit according to the installation plan and align it using a spirit level. Insert the foundation bolts in the foundation and grout them with a fast setting grout-mixture. Once the grout mixture has set, tighten the foundation bolts fast always applying the same tightening moment.

3.3 Installation of Pumps Designed for Higher Liquid Temperatures

With pumps processing liquids at a working temperature exceeding 100°C, a misalignment can occur in the flexible coupling due to the different thermal expansion of motor and pump. The excessive misalignment can result in vibrations and higher wear on the flexible coupling and the anti-friction bearings.

For the correct installation of the unit, the pump must be operated in the plant to achieve its working temperature. Having shut down the unit, check the axial and radial shaft misalignment of both coupling halves. Prior to measuring the shaft misalignment, release the bolts of the support (part no. 901.6). If any shaft misalignment is assessed, it must be compensated by putting plane-parallel shims underneath motor and/or support.

4. Pipework

Any pipework being connected should be state of the art and designed for the respective operating conditions. Ensure that the forces and moments transmitted by the pipework do not exceed the admissible values. (Admissible pipework forces and moments will be indicated in the following).

The pipework must be free of any impurities such as weld slag or scale. Avoid disturbance of the pump flow by variable velocity or irrational flow to the pump inlet. Such disturbances will adversely affect the pump capacity, the smooth operation and the NPSH characteristics of the pump.

When connecting the pipework make sure that as little tension as possible occurs. Refer to instructions such as given in VDMA standard VDMA 24277 „Spannungsarmer Rohrleitungsanschluß“ (Low-tension connection of pipework).

⚠	**Exceeding the admissible pipework forces and moments as well as tensions on the connections can result in escapes and leakages. In such a case, toxic and hot liquids will pose danger to life.**

4.1 Suction-Side Pipework

The construction of the suction-side pipework shall have as few baffles (bends, valves, etc.) as possible because these elements are often responsible for variable velocity and eddying. Avoid disturbances by asymmetric feed stream. When modifying nominal diameters use conical sections. If a shut-off valve is used, it must always be completely open during operation and it must never be used to control the rate of flow.

Always install the suction pipe ascending to the pump. When dimensioning the suction pipe, ensure that the flow velocity does not exceed 2 m/s.

Feed pipes must be installed descending to the pump. The flow velocity must not exceed 2.5 m/s.

For liquids being processed close to their boiling point, the flow velocity shall not exceed 0.8 m/s.

4.2 Pressure Pipework

Right behind the pump, a control valve must be available to control the rate of flow. A check valve must be provided between pump and shut-off valve when long pressure pipework or static delivery heads exceeding 10 m are given. The check valve protects the pump against liquid reflux and runback at shutdown. The flow velocity shall not exceed 5 m/s.

When modifying nominal diameters use conical sections.

5. Admissible Forces and Moments

The forces and moments the pipework transmits on the pump flanges must not exceed the values indicated. The values have been determined on the basis of DIN ISO 5199 „Centrifugal pumps, technical requirements, class II“ (Edition December 2003).

The values indicated apply to pump casings PN16 up to a temperature of 400°C.

Table 1: Admissible forces and moments acting on the suction flange

Dia-meter DN	Force [N]			Dia-meter DN	Moment [Nm]		
	Fx	Fy	Fz		Mx	My	Mz
025	765	630	675	025	810	630	540
032	945	765	810	032	990	765	675
040	1125	900	990	040	1170	945	810
050	1485	1215	1350	050	1260	1035	900
065	1890	1530	1665	065	1350	1080	990
080	2250	1845	2025	080	1440	1170	1035
100	3015	2430	2700	100	1575	1305	1125
125	3555	2880	3195	125	1890	1710	1350
150	4500	3645	4050	150	2250	1845	1575
200	6030	4860	5400	200	2925	2385	2070
250	7515	6075	6705	250	4005	3285	2835
300	9000	7245	8055	300	5445	4455	4050
350	10485	8460	9405	350	6975	5715	4950
400	11970	9675	10755	400	8730	7155	6210

Table 2: Admissible forces and moments acting on the discharge flange

Dia-meter DN	Force [N]			Dia-meter DN	Moment [Nm]		
	Fx	Fy	Fz		Mx	My	Mz
025	675	765	630	025	810	630	540
032	810	945	765	032	990	765	675
040	990	1125	900	040	1170	945	810
050	1350	1485	1215	050	1260	1035	900
065	1665	1890	1530	065	1350	1080	990
080	2025	2250	1845	080	1440	1170	1035
100	2700	3015	2430	100	1575	1305	1125
125	3195	3555	2880	125	1890	1710	1350
150	4050	4500	3645	150	2250	1845	1575
200	5400	6030	4860	200	2925	2385	2070
250	6705	7515	6075	250	4005	3285	2835
300	8055	9000	7245	300	5445	4455	3870
350	9405	10485	8460	350	6975	5715	4950
400	10755	11970	9675	400	8730	7155	6210

If not all of the loads acting on the flanges reach the maximum admissible values, one of these loads may exceed the usual limiting value provided the following additional equations of condition are fulfilled:

- Any components of a force or moment must be limited to the maximum admissible value multiplied by 1.4.
- The forces and moments actually acting on each flange must fulfil the following equation of condition:

$$\left(\frac{\sum |F|_{existing}}{\sum |F|_{\max}}\right)^2 + \left(\frac{\sum |M|_{existing}}{\sum |M|_{\max}}\right)^2 \leq 2$$

The equation of condition must be verified for each flange.

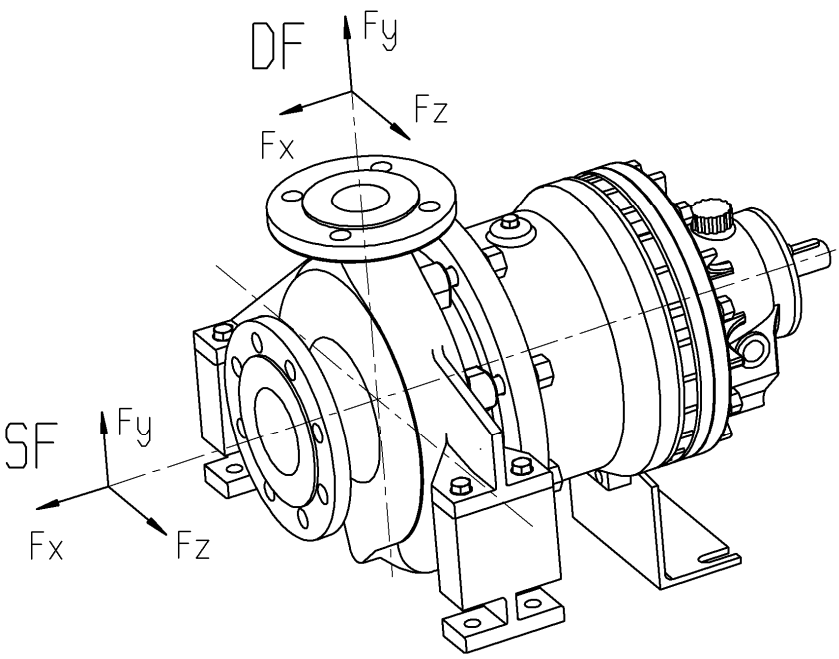

6. Auxiliary Connections

Depending on the construction type, the pump can be equipped with connections for heating, draining and monitoring. Refer to the installation plan attached to the pump for the exact location of those connections.

Ex	**If the pump is fitted with a heating jacket, the temperature of the heating medium must not exceed the maximum allowable surface temperature of the pump.**

Ex	**The ignition temperature of the heating liquid must be at least by 50°C higher than the maximum surface temperature of the pump.**

Ex	**The instruments for the monitoring of the pump such as temperature sensors, pressure sensors, etc. must have the corresponding approval for use in areas subject to explosion hazards.**

7. Insulation

Ex	**Exclusively insulate the pump in the area shown below.** **It is to be made sure that the areas of the anti-friction bearings and the thermal barrier (in case the pump is fitted with one) are not insulated.**

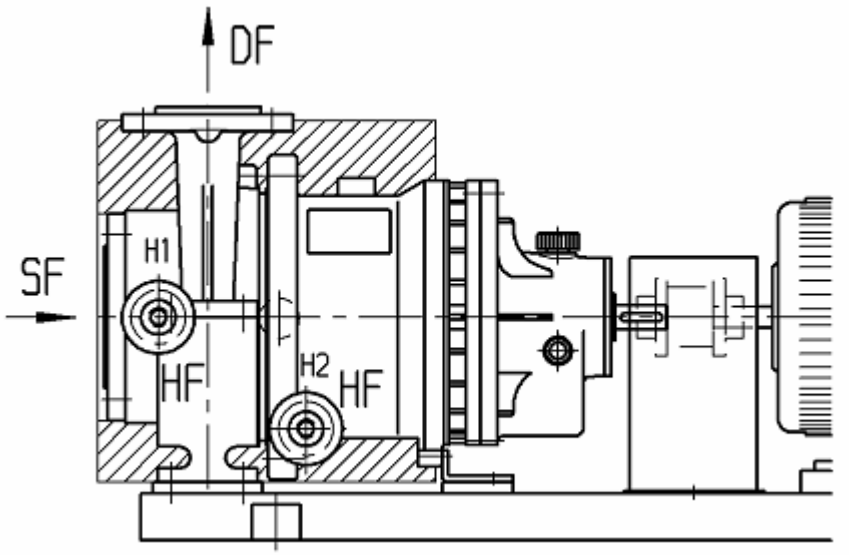

8. Electrical Connection

	The electrical connection of the driving motor must be performed by a skilled person. The relevant regulations on that subject are to be observed.

	An earthing cable is to be provided between pump unit and foundation for equipotential bonding.

1. Preparations for Commissioning

	The correct functioning of the journal bearings is a precondition to prevent the outer magnet carrier from running into the intermediate lantern and thus to prevent the occurrence of unacceptably high temperatures.

	If the pump was not explicitly ordered free from oil and grease, there will be residues of anti-seize paste on wetted components. Prior to commissioning, compatibility of the anti-seize paste with the pumped liquid shall be checked. In case of uncertainty, please contact KLAUS UNION.

1.1 Bearing Support with Oil-Lubricated Anti-Friction Bearings

	In case of pumps of bearing-support construction equipped with oil-lubricated anti-friction bearings, the bearing support must be filled with lubricating oil prior to initial commissioning.

	Always observe the prescribed oil level. The oil level being either too high or too low will result in failure of the anti-friction bearings.

For recommended types of oil refer to section "Maintenance" of this operation manual.

1.1.1 Construction with Constant-Level-Oiler

To fill with oil, remove vent plug (part no. 672). Fill oil into the bearing support (part no. 330) until the oil becomes visible in the screwed socket with the oil reservoir folded back. Check the oil level: half of the gauge (part no. 642) must be covered with oil. Then fill the oil reservoir through the chamfered drain pipe and fold it back. Now the oil level adjusts to the required level. As long as there is oil in the oil reservoir, the Constant-Level-Oiler will ensure that the oil level is always correct.

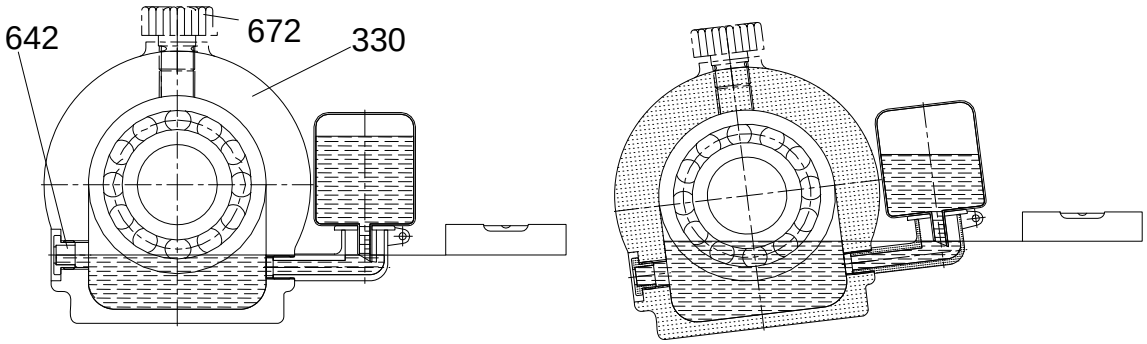

Right Wrong

1.2 Checking the Direction of Rotation

The motor's direction of rotation must correspond with the direction-of-rotation arrow on the intermediate lantern.

Ex	**Only check the direction of rotation with the motor uncoupled.**

1.3 Filling and Venting

Filling and venting of pump and plant are carried out simultaneously. Prior to filling the pump, fully open any valves in suction and pressure pipes. During the filling process turn the pump shaft by hand. For that purpose, the current feed to the motor must be interrupted and the coupling guard removed. No air pockets must remain in the system. Air and gas pockets will result in the immediate failure of the pump.

	When a pump is operated which has not been completely filled, an ignition source can develop due to excessive heat input. When being operated in areas subject to explosion hazards, the pump must be completely filled. If the operating company cannot ensure the complete filling of the pump, appropriate monitoring measures must be taken.

If it is not possible to vent the pump via the pressure pipe, e. g. because a check valve is installed in the pipe, the pump must be vented via a separate ventilating valve on the discharge side.

2. Monitoring Equipment

	When the pump is operated in areas subject to explosion hazards, it may be necessary for the operating company to install monitoring devices to ensure that the pump does not become an ignition source. Essentially, ignition sources are hot surfaces and sparks (when rotating components contact). If required, KLAUS UNION can offer advice and support concerning the choice and purchase of monitoring equipment.

For installation, commissioning and operation of the monitoring equipment observe the corresponding operation manuals supplied with the instruments.

3. Commissioning

Completely open all suction-side shut-off valves and slightly open the control valve in the pressure pipe.

	To prevent the pump from excessively heating up, never operate it against closed control valve on the discharge side. For start-up, the discharge-side control valve must be sufficiently open for the minimum rate of flow Q_{min}.

If for operating reasons it is only possible to commission the pump against closed discharge-side control valve, it is to be checked with the help of the following equation, whether the resulting heating of the pump during operation against closed gate valve is allowable:

$$\frac{\Delta T}{t} = \frac{P}{\rho \cdot V \cdot c_p}$$ [K/s] Heating of the pump per second

P Pumping capacity with the gate valve closed in [kW]
ρ Density of the product in [kg/dm³]
V Filling quantity of the hydraulic system in [Litre], refer to u. m. table
c_p Specific thermal capacity of the product in [kJ/kg/K]

Pump Size	Filling Quantity [Litres]
040-025-125	0.5
040-025-160	0.7
040-025-200	1,0
050-032-125	0.7
050-032-160	0.9
050-032-200	1.3
050-032-250	2,0
065-040-125	0.9
065-040-160	1.2
065-040-200	1.8
065-040-250	2.6
065-040-315	3.7
080-050-125	1.3
080-050-160	1.7
080-050-200	2.3
080-050-250	3.5
080-050-315	4.8
100-065-125	1.9
100-065-160	2.4
100-065-200	3.2
100-065-250	4.7

Pump Size	Filling Quantity [Litres]
100-065-315	6.4
125-080-160	3.5
125-080-200	4.6
125-080-250	6.3
125-080-315	8.4
125-080-400	13.1
125-100-200	5.7
125-100-250	7.9
125-100-315	10.6
125-100-400	16.5
150-125-250	10.9
150-125-315	14.1
150-125-400	21.6
200-150-250	15.4
200-150-315	19.4
200-150-400	28.5
200-150-500	40.5
250-200-250	24.3
250-200-315	29.8
250-200-400	42.2
300-250-315	40.5

At the most, the pump can be operated against closed gate valve on the discharge side until the allowable pump temperature is reached.

Switch on the motor.

If the delivery pressure does not increase despite rising speed, the pump has to be switched off immediately and vented again carefully.

When the pressure gauge indicates delivery pressure, slowly open the control valve in the pressure pipe until the duty point is reached. The rate of flow can be increased in accordance with the characteristic curve until a point is reached where the motor would be overloaded.

In case either the operation parameters are modified or they no longer correspond with the ones stipulated in the order (delivery head, rate of flow Q_{min} and Q_{max}, viscosity, density, liquid temperature), it is to be checked whether:

- the magnet drive is still sufficient,
- the motor is not overloaded,
- on suction condition the suction head to be overcome does not get too high,
- on feed condition the available feed head is still sufficient,
- The maximum allowable temperature is not exceeded.

⚠	**With liquid temperatures exceeding 100 °C it must be observed that during commissioning or in case of varying operating conditions the maximum speed in temperature changing does not exceed 25 °C per minute.**

Ex	**On initial start-up, operate the pump for at least 3 hours under operation conditions while checking for unusual noises and high temperatures on the pump surface. Measure the surface temperature with commercially available surface temperature meters.**

Ex	**In rare cases it may happen during acceleration of the pump that the magnet drive desynchronises ("breakaway of magnet drive"). This condition can be detected by monitoring the delivery head, capacity and pump power output. Operation of the pump with a desynchronised magnet drive can cause excessive temperatures.**

4. Minimum and Maximum Rate of Flow

Unless otherwise indicated in the pump's data sheet, the following limiting values should be observed:

Continuous operation:

Minimum rate of flow $Q_{min} = 0.3 \times Q_{opt}$
Maximum rate of flow $Q_{max} = 1.1 \times Q_{opt}$

Short-time operation:

Minimum rate of flow $Q_{min} = 0.1 \times Q_{opt}$
Maximum rate of flow $Q_{max} = 1.2 \times Q_{opt}$

5. Shutdown

Switch off the motor and close the shut-off valves. Drain the pump completely if it is switched off for dismantling purposes.

1. General

Please observe the instructions given in the section "Safety" of this operation manual when carrying out any maintenance works.

During the guarantee period, any maintenance works are either to be performed by KLAUS UNION staff or with KLAUS UNION's authorisation. Dismantling and Re-assembly of the centrifugal pump type SLM NHO have to be carried out by qualified staff.

	Magnet drives cause strong magnetic fields. Persons with a pacemaker should not stay close to the magnet drive or come into close bodily contact with parts of it.

	Pumps processing dangerous liquids are to be decontaminated. **When draining the pump, any danger to persons and environment must be precluded.**

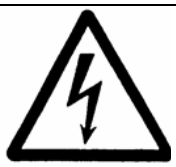	**On principle, the driving motor must have been de-energized prior to effecting any works on pumps. Unintentional energizing of the pump must be precluded.**

2. Lubrication of Bearings

2.1 Journal Bearings

The journal bearings are lubricated by the pumped liquid. When the pump is operated to its designated use, the journal bearings will be provided with a sufficient quantity of lubricant and they will be resistant to wear and maintenance-free. Concerning monitoring of operation to designated use, refer to instructions given in sub-section “Inspection and Maintenance”.

	If the pump has run dry unintentionally, the pump must be allowed to cool down for a longer time. If the pump is filled with cold liquid immediately upon its dry-running, the journal bearings may be destroyed. **After longer periods of dry-running, the pump must be dismantled and the journal bearings must be checked for any damage.**

2.2 Anti-Friction Bearings

Ex	**To avoid the anti-friction bearings becoming an ignition source, the anti-friction bearings must be maintained according to the instructions given in the operation manual.**

The anti-friction bearings are designed for a rated working life of 25000 hours at a bearing temperature of 90°C. Replace the anti-friction bearings after 90 % of their service life at the latest. However, the working life of the bearings can reduce due to higher bearing temperatures and unfavourable operating conditions (strong vibrations, aggressive environmental conditions, etc.).

2.2.1 Oil-Lubrication

The oil has to be changed at least once a year or after a certain number of operating hours depending on the temperature of the anti-friction bearings.

Anti-friction-bearing temperature	**Operating hours**
Up to 80 °C	8000
More than 80°C	5000

Shut the pump down for the oil change.

Refer to the following table for the oil quantities required for the respective pump size.

Pump Size (Impeller Diameter)	**Quantity of Oil**
SLM NHO 125/ 160/ 200	abt. 560 ml
SLM NHO 250	abt. 650 ml
SLM NHO 315/ 400	abt. 1410 ml
SLM NHO 500	abt. 1910 ml

For special applications at higher temperatures (temperature of the pumped liquid exceeding 250°C), or when a wide temperature range needs to be covered, a synthetic lubricating oil with viscosity grade ISO-VG 100 is recommended.

3. Inspection and Maintenance

3.1 Inspection during Operation

Ex	**To prevent the occurrence of ignition sources, which can be caused by failures and result in an explosion, the operating company has to take measures for monitoring the pump.**

Failures occurring during operation can cause the occurrence of an ignition source on the pump that can lead to an explosion when an explosive atmosphere is given. Examples for ignition sources: hot surfaces, sparks and discharge by electrostatic charging. The following table lists possible malfunctions and measures to prevent that these malfunctions result in the occurrence of an ignition source:

Malfunction	Possible Consequences	Measures
Operation with wrong direction of rotation	Overheating of the isolation shell	Monitoring of • Delivery head or • Capacity or • Pump output or • Isolation shell temperature
Dry-running as a result of incorrect commissioning (pump not filled and vented)	Overheating of the isolation shell	Monitoring of • Delivery head or • Capacity or • Pump output or • Isolation shell temperature
Throttling of the suction side shut-off valve or clogging of a filter in the suction pipework	Overheating of the isolation shell caused by vaporization in the pumped liquid or by cavitation within the pump	Monitoring of • Delivery head or • Capacity or • Pump output or • Isolation shell temperature
Pumping of non-specified liquid (liquid temperature too high)	The allowable surface temperature is exceeded	Monitoring of • Liquid temperature or • Isolation shell temperature
Pumping of non-specified liquid (liquid density too high)	Breakaway of magnet drive due to exceeding of the allowable transmission capacity	Monitoring of • Delivery head or • Capacity or • Pump output or • Isolation shell temperature

Malfunction	Possible Consequences	Measures
Pumping of non-specified liquid (liquid viscosity too high)	Breakaway of magnet drive due to exceeding of the allowable transmission capacity. Overheating of the isolation shell due to flush flow being too low	Monitoring of • Delivery head or • Capacity or • Pump output or • Isolation shell temperature
Pumping of non-specified liquid (thermal capacity of the liquid too low)	Vaporization of liquid in the pump	Monitoring of • Delivery head or • Capacity or • Pump output or • Isolation shell temperature
Pumping less than the specified minimum flow	Vaporization of liquid in the pump	Monitoring of • Capacity or • Pump output or • Isolation shell temperature
Breakaway of magnet drive on commissioning or by overload of the magnet drive	Overheating of the isolation shell	Monitoring of • Delivery head or • Capacity or • Pump output or • Isolation shell temperature
Damage to the anti-friction bearings due to non-observance of maintenance instructions	Overheating of anti-friction bearings, heat caused by friction between rotating and stationary components	Monitoring of • Anti-friction-bearing temperature or • Anti-friction-bearing vibration
NPSH of the plant is lower than NPSH of the pump	Vaporization of liquid in the pump	Monitoring of • Delivery head or • Capacity or • Pump output or • Isolation shell temperature

For monitoring of the driving motor and the flexible coupling, observe the instructions given in the respective operation manuals.

3.1.1 Monitoring of the Pump Output

The pump power input indicates whether the pump is operated to its designated use. Moreover, any malfunctions or damage to the pump can be inferred from the pump output. KLAUS UNION recommend the use of appropriate monitoring instruments in areas subject to explosion hazards as well as in non-hazardous locations and offer such devices on request. The instruments will be installed in the control cabinet and thus do not have to be approved for hazardous areas.

3.1.2 Monitoring the Isolation Shell Temperature

Many malfunctions have a direct effect on the temperature of the isolation shell. As the surface temperature on the outside of the isolation shell can be a direct ignition source in hazardous areas, it is recommended to use an instrument to monitor the isolation shell temperature particularly when the pump is used in hazardous areas.
KLAUS UNION can offer suitable instruments for that purpose.

3.1.3 Vibration Monitoring

The measuring of vibrations is particularly suitable to monitor the anti-friction bearings. Refer to the table for the allowable rate of vibrations. The rate of vibrations has to be measured horizontally and vertically to the shaft axis on the coupling-side end of the bearing support. If the rates of vibrations thus determined exceed the maximum allowable values, the cause has to be found.

Speed n	Maximum effective Rate of Vibrations v_{eff} (mm/s) depending on the Shaft Height h_1 of the Pump	
	$h_1 \leq 225$ mm	$h_1 > 225$ mm
[min^{-1}]	[mm/s]	[mm/s]
$n \leq 1800$	2.8	4.5
$1800 < n \leq 4500$	4.5	7.1

3.2 Maintenance

The following descriptions of maintenance works to be executed require that the pump has already been partially dismantled. Check the parts for their re-usability and replace damaged components using new original spare parts.

Ex	**If the clearance between rotating and stationary components is too narrow, it may happen that these components contact and the resulting frictional heat entails excessive temperatures.**

3.2.1 Journal Bearings

Replace the journal bearing or parts of it using new original spare parts when the slide faces show visible signs of wear (e. g. traces of grooves from running). Refer to the following table for dimensions of bearing sleeves and bearing bushes as well as for the axial clearance of the journal bearing.

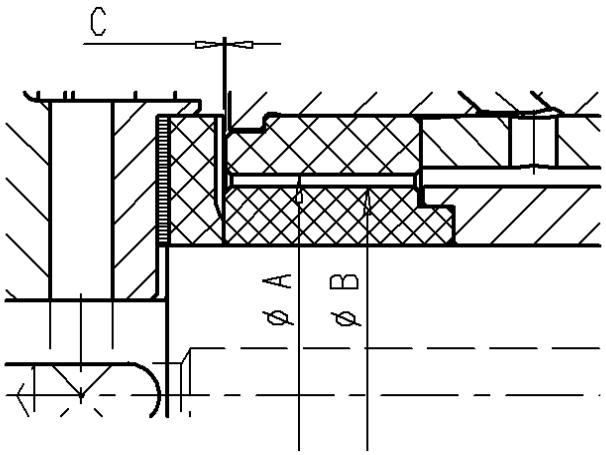

Carbon / SSiC-Bearing

Bearing	Inner Diameter Bearing Bush	Outer Diameter Bearing Sleeve	Thrust Bearing Clearance
	∅ A	∅ B	C
09 E	$40^{+0,025}$	$39,98_{-0,01}$	0,3 ±0,1
13 E / 16 E	$53^{+0,030}$	$52,98_{-0,01}$	0,5 ±0,1
19 E / 25 E / 31 E	$80^{+0,035}$	$79,98_{-0,01}$	0,5 ±0,1

Carbon / Stellite-Bearing

Bearing	Inner Diameter Bearing Bush	Outer Diameter Bearing Sleeve	Thrust Bearing Clearance
	∅ A	∅ B	C
09 E	$40^{+0,025}$	$39,92_{-0,02}$	0,3 ±0,1
13 E / 16 E	$53^{+0,030}$	$52,90_{-0,02}$	0,5 ±0,1
19 E / 25 E / 31 E	$80^{+0,035}$	$79,83_{-0,01}$	0,5 ±0,1

3.2.2 Wear Ring Allowance

Replace wear rings (part no. 512, part no. 512.1, part no. 512.2) using new original spare parts when the following maximum radial allowances are exceeded:

Choke-Gap Diameter [mm]	Maximum Radial Allowance [mm]	
	s1	**s2**
50 to 75	0.40	-
76 to 89	0.45	-
90 to 139	0.50	0.40
140 to 209	0.70	0.30
210 to 270	0.80	0.40
> 270	1.00	0.50

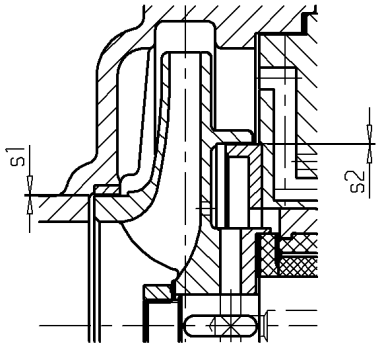

4. Dismantling

For assembly and dismantling, the following KU-special tools are available:

Designation	Id.-No.
Clamping Aid for Magnet Carrier Size 09E	P00001044
Clamping Aid for Magnet Carrier Size 13E	P00001045
Clamping Aid for Magnet Carrier Size 16E	P00001046
Clamping Aid for Magnet Carrier Size 19E	P00001047
Clamping Aid for Magnet Carrier Size 25E	P00020945
Assembly Aid Shaft Nut Drive Shaft KM 9	P00548891
Assembly Aid Shaft Nut Drive Shaft KM11	P00107749
Assembly Aid for Bearing Bush Magnet Drive Size 09E	P00969926

4.1 Preparations

- Isolate the current feed to the motor.
- Close the valves in suction and pressure pipework.
- Dispose of the remaining residual liquid in the pump.
- Remove the coupling guard.
- When using a flexible coupling with cartridge unit: dismantle the cartridge unit. The motor can remain installed on the base plate. When using a flexible coupling without cartridge unit, remove the motor from coupling and base plate.
- Remove the pump-side coupling half from the pump's drive shaft.

A T T E N T I O N	**Use an offset cam for dismantling of the coupling.**

- Disconnect suction and pressure nozzles of the pump from the pipework.

4.2 Dismantling of the Pump

A T T E N T I O N	**For assembly and dismantling of the pump, refer to the pertaining sectional drawing.**

It is recommended to use the specified KU-special tools.

With pumps of construction type with oil-lubricated anti-friction bearings, prior to dismantling the lubricating grease must be drained from the bearing support (part no. 330) via the oil drain plug (part no. 903.8).

For dismantling, the pump should be positioned as indicated in the following drawing.

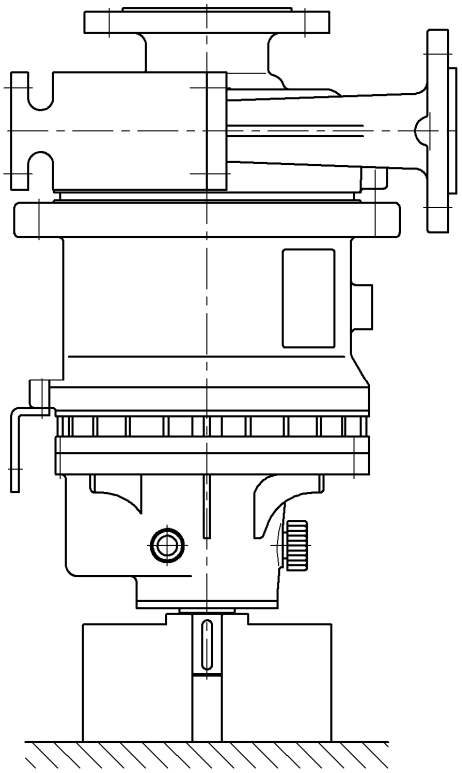

- Release and remove assembly stud nuts (part no. 920.1) and dismantle the pump casing (part no. 102).
- Pull the complete assembly comprising impeller (part no. 230) / casing cover (part no. 161) / isolation shell (part no. 817) with a suitable lifting device from the intermediate lantern (part no. 146.1).
- Unscrew the cap screws (part no. 901.1) at the isolation shell flange and dismantle the isolation shell. Use the forcing threads in the isolation shell flange provided for that purpose.
- For further dismantling, firmly secure the outer magnet carrier.
  [Use of KU-special tool (clamping aid) is recommended]
- Release the impeller screwing (part no. 901.19 / part no. 922) and pull the impeller off the shaft.

- For pump construction with inducer, the screwing (part no. 901.19 / part no. 931.3) is be released and removed. Turn the inducer (part no. 236) off the impeller screwing (part no. 922). Release the impeller screwing (part no. 922) and pull the impeller off the shaft.

- Remove the thrust bearing (part no. 314) on the impeller side together with the holder (part no. 386).

Magnet Drive Size 09E:

- Pull the casing cover (part no. 161) together with the bearing bush (part no. 545.1) off the pump shaft.
- Carefully clamp the casing cover and unscrew the bearing bush from the casing cover. (Size of the jaw SW80, use of KU-special tool is recommended)

- Carbon / SSiC Bearing: Carefully pull bearing sleeves (part no. 529.1) and distance sleeve (part no. 525) off the shaft.
- Carbon / Stellite Bearing: Carefully pull bearing sleeve (part no. 529.1) off the shaft.

- Remove the inner magnet carrier from the clamping aid and pull the pump shaft out of the inner magnet carrier.
- Unscrew cap screws (part no. 901.18) and pull the intermediate lantern (part no. 146.1) off the bearing support (part no. 330). Use the forcing threads in the bearing support provided for that purpose.
- Remove the lock washer (part no. 931) and release the shaft nut (part no. 921) (use of KU-special tool is recommended). Pull the complete outer magnet carrier (part no. 861 and 818.1) off the drive shaft (part no. 213).

Magnet Drive Sizes 13E, 16E, 19E, 25E, 31E:

- Pull the casing cover (part no. 161) together with the bearing bush (part no. 545.1) off the pump shaft.
- Unscrew the cap screws (part no. 901.3) at the casing cover (part no. 161) and remove the wear ring (part no. 512.1). Pull the casing cover off the bearing bush (part no. 545.1) and the bearing bush off the shaft (part no. 211).

- Carbon / SSiC Bearing: Carefully pull bearing sleeves (part no. 529.1) and distance sleeve (part no. 525) off the shaft.
- Carbon / Stellite Bearing: Carefully pull bearing sleeve (part no. 529.1) off the shaft.

- Remove the inner magnet carrier from the clamping aid and pull the pump shaft out of the inner magnet carrier.
- Unscrew the cap screws (part no. 901.18) and pull the intermediate lantern (part no. 146.1) off the bearing support (part no. 330). Use the forcing threads in the bearing support provided for that purpose.
- Remove the lock washer (part no. 931) and release the shaft nut (part no. 921) (use of KU-special tool is recommended). Pull the complete outer magnet carrier (part no. 861 und 818.1) off the drive shaft (part no. 213).

All Magnet Drive Sizes:

- Remove the bearing support from the assembly aid and position it horizontally on a stable support.
- Unscrew cap screws (part no. 901.17) and remove the bearing cover (part no. 360). Use the forcing threads provided for that purpose.
- Remove the snap ring (part no. 932.2).
- Dismantle thermal barrier (part no. 152) with bearing cover (part no. 360.2) and shaft sleeve (part no. 525.1).
- Remove the snap ring (part no. 932).
- Remove the bearing unit [drive shaft (part no. 213), ball bearing (part no. 321)], insert from the bearing support.
- Dismantle the ball bearings with standard offset cams.

5. Re-Assembly

Prior to re-assembly, check the usability of all pump components. During assembly, the anti-friction bearings must be protected from dirt and moisture. Any sealing surfaces are to be cleaned carefully, used static gaskets are to be replaced by new ones. Check the clearances and the journal bearing for wear as indicated above.

Fitting surfaces and screwed connections have to be coated with graphite or a similar agent. Where components in contact with the liquid are concerned, make sure that the antiseize agent used is compatible with the pumped liquid.

⚠	**When replacing the outer magnet carrier tube and/or outer magnet carrier hub by original spare parts, this unit must be assembled prior to balancing. (Balancing quality class G 6.3 to DIN ISO 1940).**

5.1 Magnet Drive SLM NHO

- Heat the ball bearing (part no. 321) to abt. 80°C and push it on the drive shaft (part no. 213).
- Push the splash ring (part no. 508) on the shaft via the knurled surface.
- Heat the second ball bearing to abt. 80°C and mount it on the shaft.
- Insert the snap ring (part no. 932) into the bearing support (part no. 330).
- Heat the bearing support in the bearing seat area to abt. 80 °C, push the shaft equipped with anti-friction bearings into the bearing seat.
- Push shaft sleeve (part no. 525.1) on the drive shaft.
- Insert the bearing cover (part no. 360.2) into the thermal barrier (part no. 152) and secure it with snap ring (part no. 932.2).
- Mount the thermal barrier in front of the bearing support.
- Mount the bearing cover (part no. 360) with cap screws (part no. 901.17) to the bearing support.

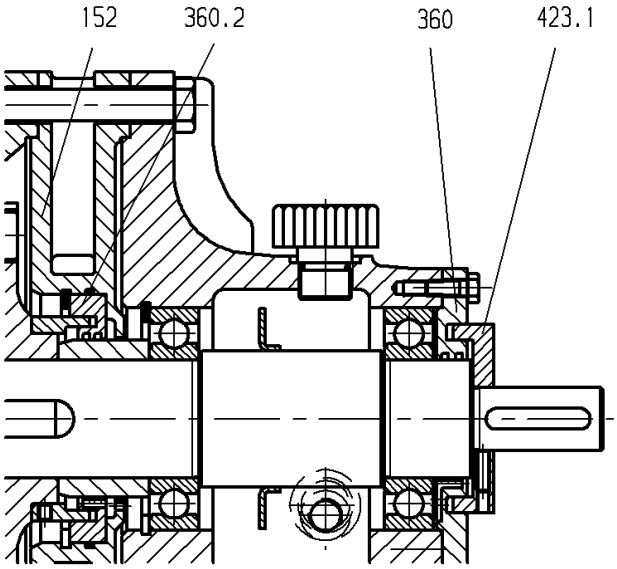

- Push the splash ring (part no. 423.1) on the drive shaft (part no. 213).
- Secure drive shaft (part no. 213) against turning and insert the key (part no. 940.1) into the key groove.
- Push the outer magnet carrier with the outer magnet carrier hub on the shaft end and fasten and secure the outer magnet carrier with the lock washer (part no. 931) and the shaft nut (part no. 921). (Use of KU-special tool is recommended)

5.2 Hydraulic Component SLM NHO

5.2.1 Magnet Drive 09E

- Screw bearing bush (part no. 545.1) into the casing cover (part no. 161). (Size of the jaw SW 80, use of KU-special tool is recommended)
- Push the inner magnet carrier (part no. 818.2) on the pump shaft (part no. 211) and fix it in a clamping aid. [Use of KU-special tool (clamping aid) is recommended]
- Insert the elastomer washer (part no. 504.2) and the thrust bearing (part no. 314) into the inner magnet carrier.

- Carbon / SSiC Bearing: Carefully assemble SSiC-bearing sleeves (part no. 529.1) and distance sleeve (part no. 525) and push the resulting assembly over the pump shaft.
- Carbon / Stellite Bearing: Carefully push the SSiC-bearing sleeve (part no. 529.1) over the pump shaft.

- Carefully push the assembly comprising casing cover / bearing bush over the bearing sleeves on the pump shaft.
- Put the elastomer washer (part no. 504.2) and thrust bearing (part no. 314) in the holder (part no. 386) and push it on the pump shaft.
- Install the key (part no. 940.4) in the key groove of the pump shaft and push the impeller (part no. 230) on the pump shaft.
- Fasten and secure the impeller with the impeller screwing (part no. 901.19 / part no. 922). (For tightening moments of the screwing refer to the corresponding table)

- For construction with inducer, fasten and secure the impeller with the impeller screwing (part no. 922). (For tightening moments of the screwing refer to the corresponding table) Screw the inducer (part no. 236) on the impeller screwing (part no. 922) and fasten and secure it by means of the screwing (part no. 901.19 / 931.3).

- Remove the assembled unit from the clamping aid and position the assembly with the impeller facing the ground on a stable support to proceed with the assembly of the isolation shell.
- Insert the gasket (part no. 400.3) into the lining groove of the casing cover. Place the isolation shell (part no. 817) in the centring and fasten it on the casing cover by means of cap screws (part no. 901.1).

5.2.2 Magnet Drive 13E, 16E, 19E, 25E, 31E

- Screw the bearing bush (part no. 545.1) together with the wear ring (part no. 512.1) with cap screws (part no. 901.3) on the casing cover (part no. 161).
- Push the inner magnet carrier (part no. 818.2) on the pump shaft (part no. 211) and fix it in a clamping aid. [KU-special tool (clamping aid) is recommended.]
- Insert the elastomer washer (part no. 504.2) and the thrust bearing (part no. 314) in the inner magnet carrier.

- Carbon / SSiC Bearing: Carefully assemble SSiC-bearing sleeves (part no. 529.1) and distance sleeve (part no. 525) and push the resulting assembly over the pump shaft.
- Carbon / Stellite Bearing: Carefully push the SSiC-bearing sleeve (part no. 529.1) over the pump shaft.

- Carefully push the assembly comprising casing cover / bearing bush over the bearing sleeves on the pump shaft.
- Put the elastomer washer (part no. 504.2) and thrust bearing (part no. 314) in the holder (part no. 386) and push it on the pump shaft.
- Install the key (part no. 940.4) in the key groove of the pump shaft and push the impeller (part no. 230) on the pump shaft.
- Fasten and secure the impeller with the impeller screwing (part no. 901.19 / part no. 922). (For tightening moments of the screwing refer to the corresponding table)

- For construction with inducer, fasten and secure the impeller with the impeller screwing (part no. 922). (For tightening moments of the screwing refer to the corresponding table). Screw the inducer (part no. 236) on the impeller screwing (part no. 922) and fasten and secure it by means of the screwing (part no. 901.19 / 931.3).

- Remove the assembled unit from the clamping aid and position the assembly with the impeller facing the ground on a stable support to proceed with the assembly of the isolation shell.
- Insert the gasket (part no. 400.3) into the lining groove of the casing cover. Place the isolation shell (part no. 817) in the centring and fasten it on the casing cover by means of cap screws (part no. 901.1).

5.3 Final Assembly SLM NHO

- Fix the completely assembled bearing support vertically in the assembly aid as described in the corresponding dismantling procedure.
- Screw the intermediate lantern (part no. 146.1) on the complete bearing support (incl. thermal barrier) by means of screws (part no. 901.18 / part no. 902.3).
- Position the assembled unit comprising impeller/casing cover/isolation shell in the centring of the intermediate lantern.

A T T E N T I O N	**The position of the casing cover in the intermediate lantern is determined by a set screw in the intermediate lantern.**

- Fit the gasket (part no. 400.1) in the centring of the casing cover.
- Screw the assembly studs (part no. 902) in the threaded bores of the pump casing (part no. 102).
- Put the pump casing in the centring of the casing cover and fasten it by means of the assembly stud nuts (part no. 920.1) (the nuts to be tightened only slightly!).
- Put the pump in a horizontal position, align pump casing and intermediate lantern and tightly fasten the assembly stud nuts (part no. 920.1).
  (For tightening moments of the screwing refer to the corresponding table.)

5.4 Tightening Moments for Screws

In case materials of screws are not indicated here, please contact KLAUS UNION.

Part No.	Position	Screw Material	Thread	Tightening Moment [Nm]
901.1	Isolation Shell Flange	A4 - 70	M 8 / M 10/ M 12 / M 16	20 / 40 / 65 / 90
		1.7258		
		1.7709		25 / 45 / 75 / 100
901.19	Impeller Bolt	A4 - 70	M 8 / M 10 / M 12	20 / 40 / 60
		2.4610		
902/ 920.1	Pump Casing	5.6 galvanized +chromized	M 12/ M 16 / M 20	35 / 80 / 110
		A4 - 70		55 / 80 / 110
		1.7258		65 / 90 / 140
		1.7709		
922	Impeller Nut	1.4571/ 2.4610	M 16x1	75 / 75
			M 20x1	110 / 110
			M 24x1,5	180 / 180
			M 27x1,5	250 / 250
			M 35x1,5	350 / 350

Materials of screws are mentioned in the parts list.

6. Spare Parts

The attached spare parts list enumerates the recommended spare parts.

Ex	**Exclusively use original spare parts for repairs and replacements.**

1. Malfunctions and Causes

When contacting KLAUS UNION for further information please advise our ref.-no. and / or the serial no.

Malfunctions	Reference-Number for Cause and Elimination
Rate of flow is too low	1, 8, 9, 12, 14, 15
Rate of flow is too high	2, 16
Delivery head is too low	2, 3, 8, 9, 10, 12, 15
Delivery head is too high	1, 16, 29, 33
Pump does not suck or only to a limited extent	3, 5, 8, 15
Pump does not feed	3, 4, 5, 6, 8, 15
Pump processes by fits and starts	3, 5, 8
Pump operates noisily	3, 5, 6, 7, 12, 13
Power input is too high	2, 6, 7, 10, 11, 13, 16
Power input is too low	9, 15, 29, 32, 33
Pump runs backwards	12, 18
Pump runs unsteadily	7, 13, 17, 19, 20, 21, 22, 23, 24, 25, 26, 27, 28, 29
Pump casing leaks	28, 30, 31
Pump runs hot	4, 15, 17
Pump stalled	6, 7, 13

2. Causes and Proceedings for Elimination of Malfunctions

Ref.-No.:	Cause	Elimination
1	Resistance in pressure pipework is too high.	Clean or replace pipework and valves. Check the dimensions of the pipework nominal diameters.
2	Pressure-side pipework resistance is too low.	Throttle using control valve on pump discharge.
3	Inlet pressure is too low, geodetic suction height is too high.	Increase inlet pressure on the suction side.
4	Shut-off valve in the pressure or suction-side pipework respectively is closed.	Open the shut-off valve. If necessary, check swing-check valves.
5	The suction-side pipework still contains gas bubbles.	Vent the unit. Check suction-side pipework (refer to instructions given in section "Installation and Assembly").
6	Foreign bodies in the pump.	Dismantle and clean the pump. Replace damaged components using new original spare parts.
7	Wear of journal bearings.	Check the bearing clearance.
8	Suction pipework leaks.	Check the connections of the suction-side pipework (tightening moments and gaskets). Check tightening moments of screws and gaskets at the pump casing. Replace damaged gaskets using new original spare parts.
9	Speed is too low.	Check frequency and voltage of the motor.
10	Viscosity of the pumped liquid is too high.	Contact KLAUS UNION.
11	Density of the pumped liquid is too high.	Contact KLAUS UNION.
12	Wrong direction of rotation.	Check the motor's direction of rotation (observe direction-of-rotation arrow on the pump).
13	Anti-friction bearings are damaged.	Replace the anti-friction bearings and clean the oil chamber. Check whether the lubricant is appropriate for field of application.
14	Inadmissible reduction of area of cross section in the suction pipework.	Clean suction pipework and its baffles (filter, valves, etc.). If necessary, replace suction pipework.

Ref.-No.:	Cause	Elimination
15	Breakaway of magnet drive.	Switch off the motor. As soon as the motor comes to rest, switch it on again. In case of a repeated breakaway of the magnet drive, contact KLAUS UNION.
16	Speed is too high.	Check the frequency and the voltage of the motor.
17	Flush flow is too low.	Check the flushing system. Clean the components if necessary. Check Q_{min}.
18	Swing check valve jammed.	Check for correct operation of the swing check valve.
19	Impeller is clogged or damaged.	Clean the impeller and replace it using a new original spare part if necessary.
20	Precipitation of crystals from the pumped liquid.	Increase the temperature of the pumped liquid, e. g. by heating the pump. Contact KLAUS UNION.
21	Specified quantity of lubricant was not observed.	Check the anti-friction bearings and replace them using new original spare parts if necessary. Increase the quantity of the lubricant according to the specification.
22	Unsuitable lubricant.	Check the anti-friction bearings and replace them using new original spare parts if necessary. Check whether the lubricant is suitable for your field of application.
23	Inexpert assembly of anti-friction bearings.	Check the anti-friction bearings and replace them using new original spare parts if necessary. Assemble the anti-friction bearings properly.
24	Misaligned or loose coupling.	Check the coupling for any misalignment. If necessary, observe the instructions given in the operation manual of the flexible coupling.
25	Flexible coupling is worn.	Replace the flexible coupling by a new one. If necessary, observe the instructions given in the operation manual of the flexible coupling.
26	Poor workmanship of the foundation.	Check and correct the construction of the foundation.
27	Base plate is not rigid enough with foundationless execution.	Contact KLAUS UNION.

Ref.-No.:	Cause	Elimination
28	Pump casing is distorted.	Check and correct pipework lengths.
29	Pump design is incorrect.	Contact KLAUS UNION.
30	Unsuitable casing gasket.	Replace the casing gasket using a new original spare part.
31	Casing screws have been tightened insufficiently.	Tighten the casing screws according to the specified tightening moments.
32	Density of the pumped liquid is too low.	Contact KLAUS UNION.
33	Viscosity of the pumped liquid is too low.	Contact KLAUS UNION.